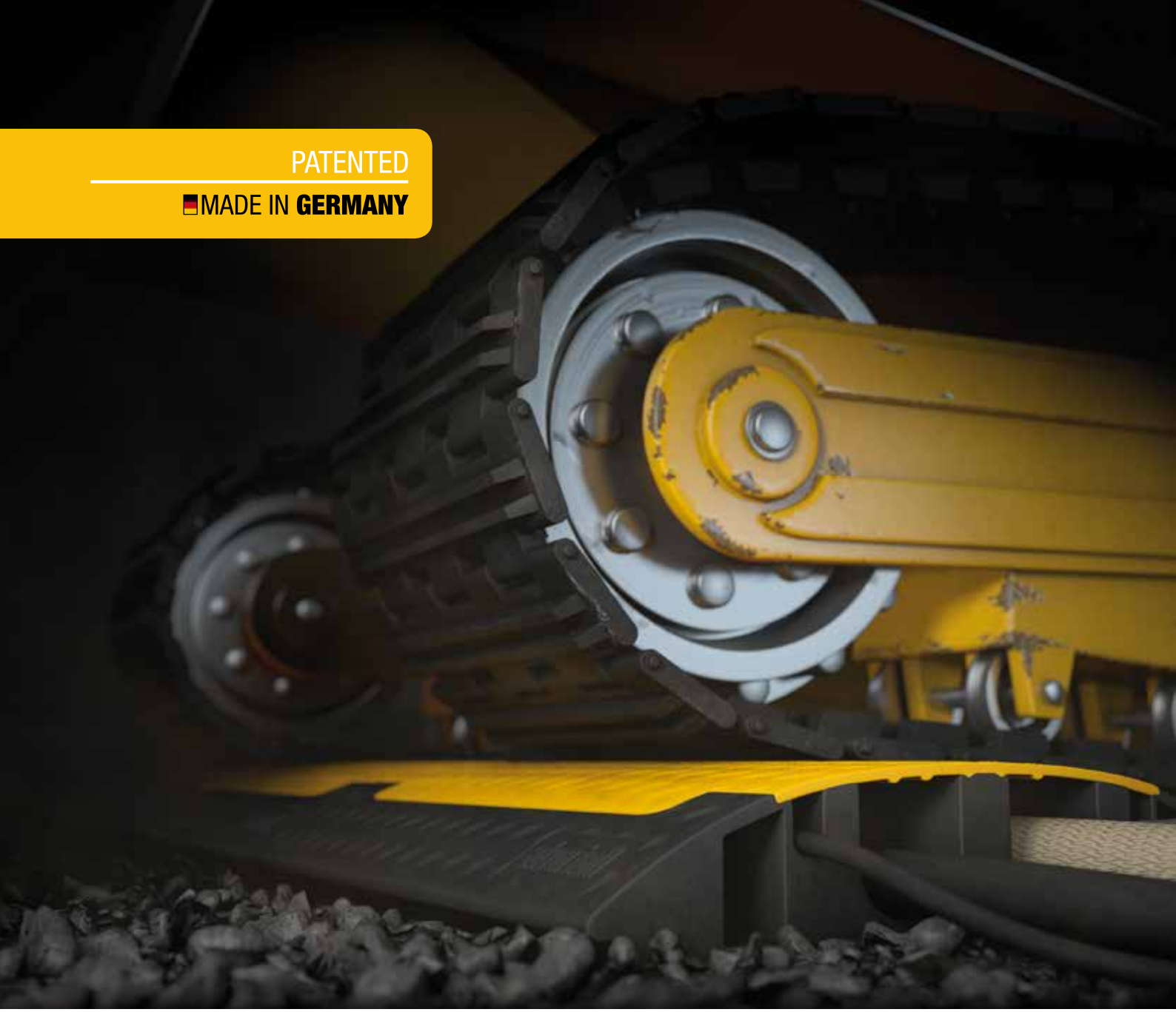

DEFENDER®

CABLE PROTECTION SYSTEMS

THE INDUSTRY & EVENT STANDARD

Product Safety
- Type approved
- Production supervised

DEKRA Certification
DEKRA
Certified

DEFENDER®

CABLE PROTECTION SYSTEMS

THE INDUSTRY & EVENT STANDARD





DEFENDER® CABLE PROTECTION SYSTEMS - THE INDUSTRY & EVENT STANDARD

Originally developed to guard electrical cables and prevent tripping hazards at rock concerts Defender® cable protectors have become the standard in a wide variety of industrial, commercial and public applications.

Designed and made in Germany from ultra-rugged, recyclable TPU (Thermoplastic Polyurethane) the Defender® range comprises various modular protection systems for cables and hoses with diameters up to 113 mm. Stringent raw material and production controls ensure that Defender® protectors meet exacting specifications and the highest quality standards. Defender® cable ramps are DEKRA certified in conformity with DIN 31000 and EN 61537, B2 fire rated according to DIN 4102 (B1 also available) and compliant with the Low Voltage Directive.

For detailed information on Defender® cable protection systems in English, French, German, and Spanish visit www.defender-protects.com,
for support contact the Defender team of cable guard experts.

DEFENDER® KABELBRÜCKEN - DER BRANCHEN- UND VERANSTALTUNGSSTANDARD

Ursprünglich als Schutz von Stromkabeln und zur Vermeidung von Stolperfallen bei Rockkonzerten gedacht, haben sich die Defender® Kabelschutz-Systeme mittlerweile als Standard bei zahlreichen Anwendungen in industriellen, kommerziellen und öffentlichen Bereichen durchgesetzt.

Die in Deutschland entworfene und hergestellte Defender® Produkte werden aus besonders robustem, wiederverwertbarem TPU (thermoplastisches Polyurethan) gefertigt und umfassen verschiedene modular einsetzbare Schutzsysteme für Kabel und Schläuche bis zu einem Durchmesser von 113 mm. Strengste Rohstoff- und Produktionskontrollen gewährleisten, dass die Defender® Kabelbrücken die anspruchsvollen Spezifikationen und höchste Qualitätsstandards erfüllen. Die Defender® Kabelschutzsysteme sind nach DIN 31000 und EN 61537 mit dem DEKRA Siegel ausgezeichnet. Sie erfüllen die Anforderungen der Brandschutzklasse B2 nach DIN 4102 (auch in B1 lieferbar) und sind mit der Niederspannungsrichtlinie konform.

Weitere Informationen über die Defender® Kabelbrücken sind unter www.defender-protects.com in den Sprachen Englisch, Französisch, Deutsch und Spanisch verfügbar.
Bei Fragen stehen Ihnen die Kabelschutzexperten von Defender gerne zur Verfügung.

SISTEMAS DE PROTECCIÓN DE CABLES DEFENDER® - EL ESTÁNDAR PARA LA INDUSTRIA Y EVENTOS

Desarrollados en principio para proteger los cables eléctricos y evitar tropiezos en conciertos de rock, los protectores de cables Defender® se han convertido en artículos habituales en una amplia variedad de usos industriales, comerciales y públicos.

Diseñada y fabricada en Alemania con TPU (poliuretano termoplástico) muy resistente y reciclable, la gama Defender® comprende diversas sistemas de protección modular para cables y tubos flexibles con diámetros de hasta 113 mm. Los estrictos controles sobre materias primas y producción garantizan que los protectores Defender® cumplen las más rigurosas especificaciones y las más altas normas de calidad. Las rampas para cables Defender® cuentan con el certificado DEKRA conforme a la DIN 31000 y EN 61537, presentan la clase de inflamabilidad B2 según la DIN 4102 (también disponible en B1) y cumplen la directiva sobre bajo voltaje.

Para ampliar la información sobre los sistemas de protección de cables Defender® en inglés, francés, alemán y español, visite www.defender-protects.com;
y para obtener asistencia, contacte con el equipo de Defender de expertos en protección de cables.

SYSTÈMES DE PROTECTION DE CÂBLES DEFENDER® - LA RÉFÉRENCE DANS L'INDUSTRIE ET L'ÉVÈNEMENTIEL

Conçus à l'origine pour protéger les câbles électriques et prévenir les risques de trébuchement lors des concerts de rock, les passages de câbles Defender® sont devenus la référence dans un ensemble très large d'applications industrielles, commerciales et publiques.

La gamme Defender®, conçue et fabriquée en Allemagne à partir de TPU (polyuréthane thermoplastique) recyclable et ultra-robuste, comporte différents systèmes de protection modulaires pour câbles et flexibles/tuyaux ayant jusqu'à 113 mm de diamètre. Grâce à des contrôles rigoureux des matières premières et de la production, les passages de câbles Defender® répondent aux spécifications les plus précises et aux normes de qualité les plus élevées. Les passages de câbles Defender® sont certifiés DEKRA conformément aux normes DIN 31000 et EN 61537, classés B2 conformément à la norme de réaction au feu DIN 4102 (B1 également disponible) et sont conformes à la directive basse tension.

Pour obtenir des informations détaillées sur les systèmes de protection de câbles Defender® en anglais, français, allemand et espagnol, veuillez-vous rendre sur le site www.defender-protects.com, et pour obtenir de l'assistance, veuillez contacter l'équipe Defender d'experts en passages de câbles.



ADVANTAGES



DEKRA CERTIFIED

The DEFENDER cable protection range has been awarded the DEKRA certificate. In accordance with testing standards EN 61537:2001 and DIN 31000:1979 all of the Defender cable crossovers adhere to the the highest safety and quality requirements. Thanks to the manufacturing process being completed in Germany, Adam Hall GmbH, exclusive distributor of DEFENDER products, is able to ensure that as part of the certification process, DEKRA can complete the required material and production checks on a regular basis.



HIGH TECH RAW MATERIAL

All DEFENDER cable crossovers are made of extremely sturdy, unbreakable TPU (thermoplastic polyurethane), produced from recycled and new plastic materials. They feature a B2 fire resistance rating (also available with a B1 rating - difficult to ignite - in compliance with DIN4102) and are resistant to oil, acids and petrol. The operating temperature range is approximately -30°C to +60°C. The Shore A hardness range is 88 ± 4.

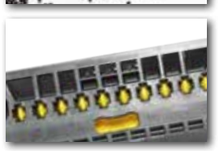

PATENTED SELF CLEANING HINGE

Our cable protectors are equipped with patented self cleaning hinge. The dirt gathering around the hinges is automatically pushed out when opening and closing the lid of the DEFENDER cable protector. All DEFENDER products are made of extremely sturdy, unbreakable TPU (thermoplastic polyurethane). If needed, the crossovers can be easily cleaned using a steam jet cleaner.

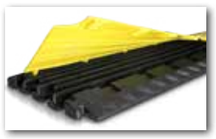

EASY LOCK SYSTEM

The DEFENDER cable protectors feature a very easy and efficient opening and locking system, allowing you to open and close the lid without tooling or special efforts. This exclusive feature also guarantees that the lid remains closed at all times, even when cars or trucks cross it over.



EASY HANDLING

The heaviest DEFENDER cable protection systems are equipped with transport handles (DEFENDER XXL, DEFENDER III and DEFENDER Midi). The DEFENDER Box provides safe and practical storage but also a logistically efficient solution for the transport of many protectors at once (euro-pallet dimensions).



MODULAR SYSTEM

The DEFENDER Cable protection systems also offer high quality accessories to adapt your configuration to each new location, such as end ramps, 90° and 45° bends. Each cable protector has connectors and corresponding sockets that enable you to connect cable protectors in the same series endlessly with one another with maximum stability.



LABEL YOUR CABLE PROTECTORS

Self branding of your cable protectors has 3 main advantages :
Advertisement for your brand / Corporate Identity conformity / Avoid mixing up your equipment with another company on large events

Self branding of the DEFENDER cable protectors with the Logo of your company can be purchased for orders ex 30 pieces. You will find the logo format requirements on our website. Feel free to contact our sales team for more information at **sales@adamhall.com**



DEFENDER® LUX

SEMI-TRANSPARENT LID SERIES

The ultimate in cable protection and trip hazard prevention, our innovative Defender LUX Series feature highly translucent yellow-tinted lids for running LED rope lights along your cables and cords. Developed in conjunction with major venues and event organizers Defender LUX Cable Protectors are the state-of-the-art indoor and outdoor solution to ensure maximum visibility and security in the dark. Defender LED rope lights are also available as dedicated accessories. See our price list for the Defender LUX and rope light range or talk to your Defender representative.

Description:	**Art. No.:**
Defender Ultra L Lux	85600LUX
Defender Ultra L II Lux	85601LUX
Defender XXL Lux	85500LUX
Defender III Lux	85002L UX
Defender Midi Lux	85300LUX
Defender Mini Lux	85200LUX
Defender Nano Lux	85150LUX

For more information see pricelist.



DEFENDER® CUSTOM SERVICE

DESIGN YOUR CABLE PROTECTION SYSTEM!

SPECIAL CONFIGURATIONS





ROBOTIC PLASTIC WELDING

For superior flexibility in designing your cable protection system and perfect integration into your environment Defender provides its own in-house robotic plastic welding service.
Need an intersection or T-junction, a special angle or radius curve?
We produce one-offs and small quantities of Defender elements made to your requirements.
What‘s more, at Defender engineering and tooling we develop and produce special purpose injection-molded protection solutions like those below.
Talk to your Defender representative for more information and minimum orders.

CUSTOM SOLUTION DEVELOPMENT



DEFENDER SUBTERRA

Developed with and produced for Halliburton Oilfield Services, the Subterra is a protection system for underground hydraulic lines. It combines thermoplastic polyurethane and reinforced polyamide materials to withstand earth pressure and truly demonstrates the scope of Defender‘s purpose design and custom production facilities.



DEFENDER RACE RESULT

Developed with leading race management and timing company race result, these injection molded thermoplastic polyurethane protectors are another Defender Custom product that has been purpose-designed for the company‘s sports event timing system antennas.

RANGE OF APPLICATION

Trade fairs / walkways / marketplaces / Christmas markets / workshops / warehouses / shopping centres / department stores / construction sites, streets, etc.
However, please ensure compliance with road traffic regulations (higher than 75 mm)

DEFENDER® ULTRA L

2 ULTRA LARGE CHANNELS – THE HEAVY DUTY GIANT

The Ultra L cable protection system is designed for extra heavy duty environments and the largest cable and hose diameters. Featuring a pair of 120 x 113 mm channels flanked by two 33 x 50 mm ducts, integrated dog bone connectors for easy linking and a 5 t per 20 x 20 cm load capacity Defender® Ultra L protectors are eminently suitable for heavy wheeled traffic, construction sites, warehouses, carnivals, fairs, music events and other demanding applications.

SPECIFICATIONS:

Art. No.:	85600
Product:	4-channel cable protector
Channel W x H:	33 x 50 mm (channels 1 and 4), 120 x 113 mm (channels 2 and 3)
Material:	TPU (Thermoplastic Polyurethane)
Shore A hardness:	88 ± 4
Load capacity:	approx. 5 t / 20 x 20 cm (typical tyre footprint area)
Fire rating:	B2 (B1 also available)
Resistant to:	most acids, oils, gasoline
Operating temperature:	-30° to +60° C
Length:	700 mm
Width:	783 mm
Height:	139 mm
Weight:	30.5 kg

ALSO AVAILABLE AS LUX VERSION!
Art. No. 85600LUX
More Info page 8.

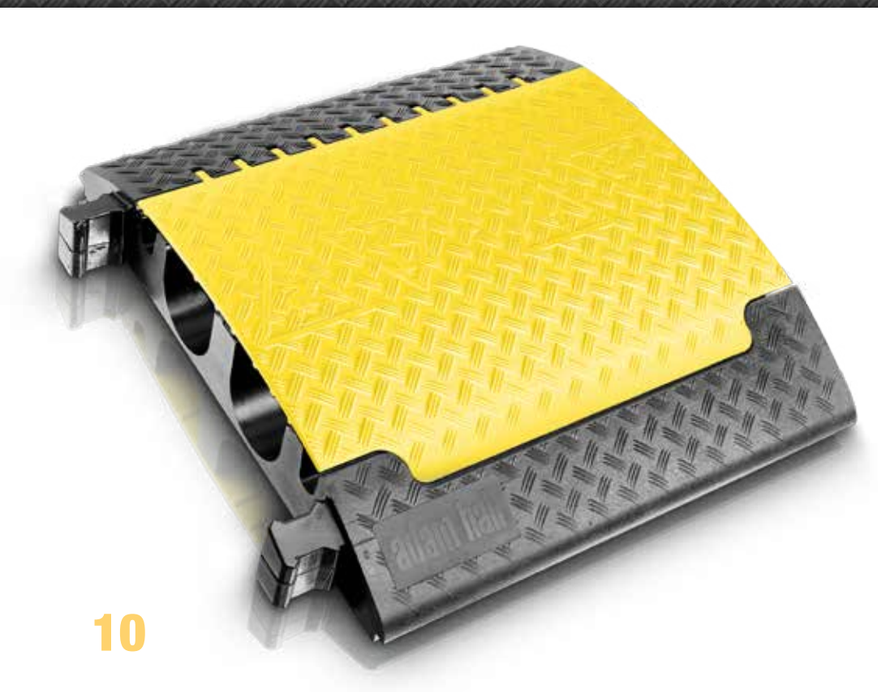



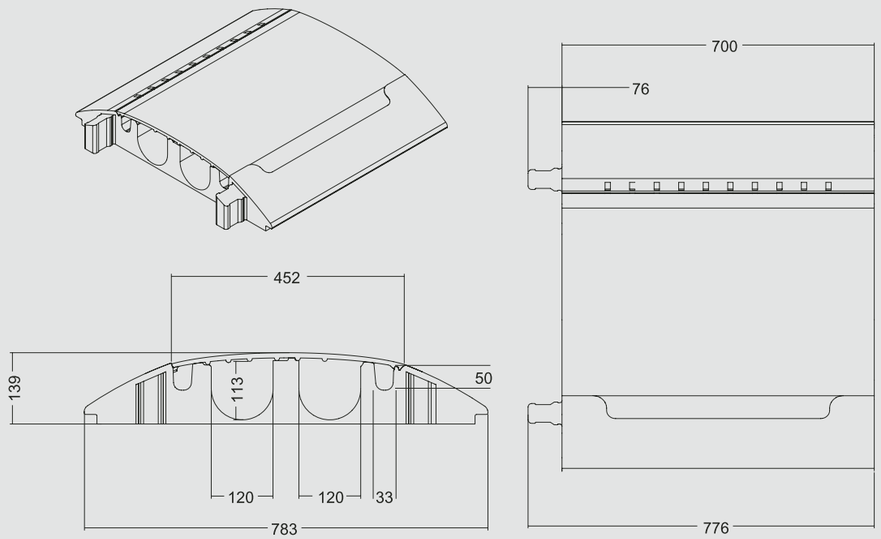

* dimensions in mm

RANGE OF APPLICATION

Trade fairs / walkways / marketplaces / Christmas markets / workshops / warehouses / shopping centres / department stores / construction sites, streets, etc.
However, please ensure compliance with road traffic regulations (higher than 75 mm)

DEFENDER® ULTRA L 2

2 ULTRA LARGE CHANNELS (2+4) – THE HEAVY DUTY GIANT

Ultra L 2 - heavy duty cable crossovers are designed for the most demanding applications and feature two extra large cable channels of 108 x 110 mm plus four channels with 25 mm diameter and integrated connector plugs for easy coupling of several elements. The load bearing capacity is approx. 5 tons on a 20 x 20 cm surface area. Therefore, Ultra L 2 cable crossovers are the ideal solution for heavy traffic, construction sites, warehouses, trade shows, carnivals and music events, and other applications involving particularly heavy use.. They are equipped with 4 fixation holes (ø 15 mm) for street installation.

SPECIFICATIONS:

Art. No.:	85601
Product:	2+4-channel cable protector
Channel W x H:	Diameter channel 1+2: 25 mm / Diameter channel 5+6: 25 mm Channel 3: 108 x 110 mm / Channel 4: 108 x 110 mm
Material:	TPU (Thermoplastic Polyurethane)
Shore A hardness:	88 ± 4
Load capacity:	approx. 5 t / 20 x 20 cm (typical tyre footprint area)
Fire rating:	B2 (B1 also available)
Resistant to:	most acids, oils, gasoline
Operating temperature:	-30° to +60° C
Length:	700 mm
Width:	766 mm
Height:	120 mm
Weight:	28.3 kg

ALSO AVAILABLE AS LUX VERSION!
Art. No. 85601LUX
More Info page 8.

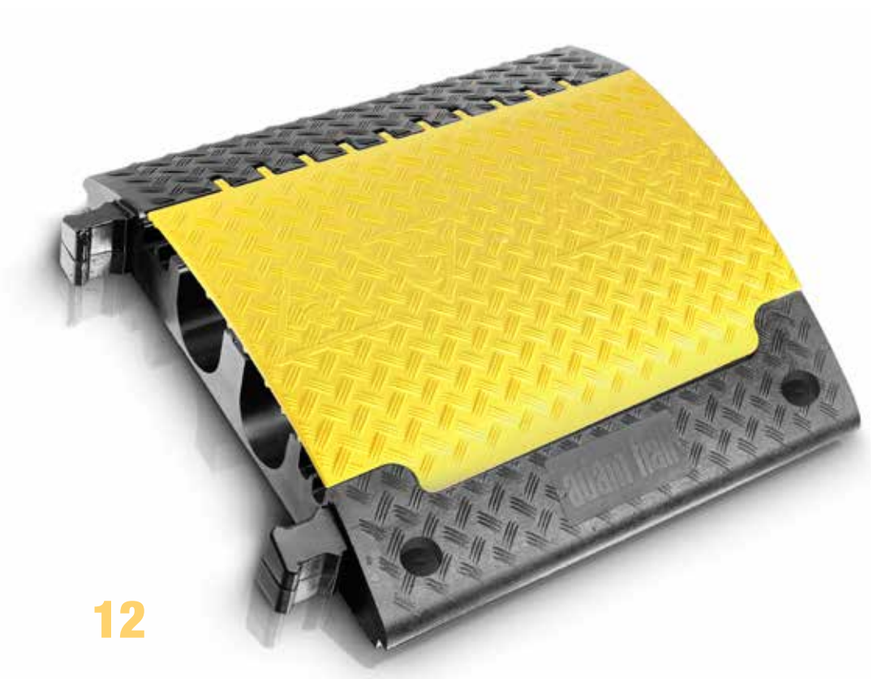



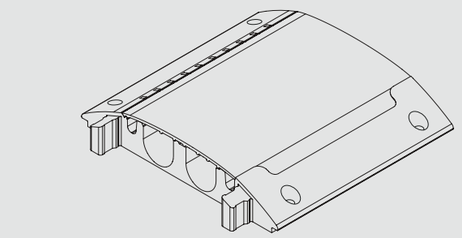

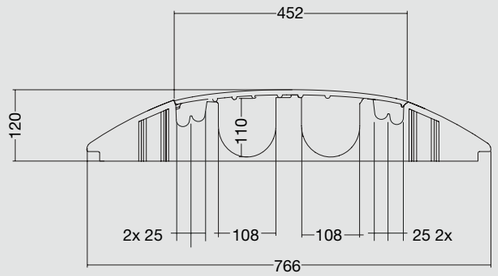

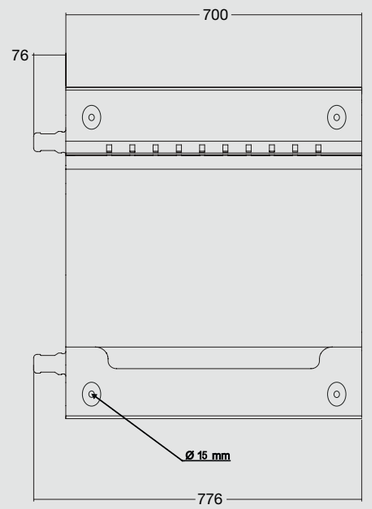

* dimensions in mm

RANGE OF APPLICATION

Trade fairs / walkways / marketplaces / Christmas markets / workshops / warehouses / shopping centres / department stores / construction sites, streets, etc.
However, please ensure compliance with road traffic regulations (higher than 75 mm)

DEFENDER® XXL

5 XXLCHANNELS – THE HEAVY DUTY ALLROUNDER

Developed for extreme work environments the Defender® XXL cable protection system provides 5 channels for large cable and hose diameters including 3 channels suitable for type C fire hoses (only hoses up to Ø62 mm - no coupling) as well as high voltage cables. Integrated dog bone connectors facilitate linking to form a rigid continuous protector, end ramps are available for secure cable entry and exit. With a 5 t per 20 x 20 cm load capacity Defender® XXL protectors are ideal for heavy wheeled traffic, construction sites, warehouses, carnivals, fairs and music events. Built-in handles for easy portability.

SPECIFICATIONS:

Art. No.:	85500
Product:	5-channel cable protector
Channel W x H:	61 x 59 mm (channels 1 and 5), 62 x 65 mm (channels 2 and 4), 60 x 63 mm (channel 3)
Material:	TPU (Thermoplastic Polyurethane)
Shore A hardness:	88 ± 4
Load capacity:	approx. 5 t / 20 x 20 cm (typical tyre footprint area)
Fire rating:	B2 (B1 also available)
Resistant to:	most acids, oils, gasoline
Operating temperature:	-30° to +60° C
Length:	700 mm
Width:	696 mm
Height:	87 mm
Weight:	21.4 kg

DEFENDER® XXL End Ramp, connectors included
Art. No.: **85510**

ALSO AVAILABLE AS LUX VERSION!
Art. No. 85500LUX
More Info page 8.

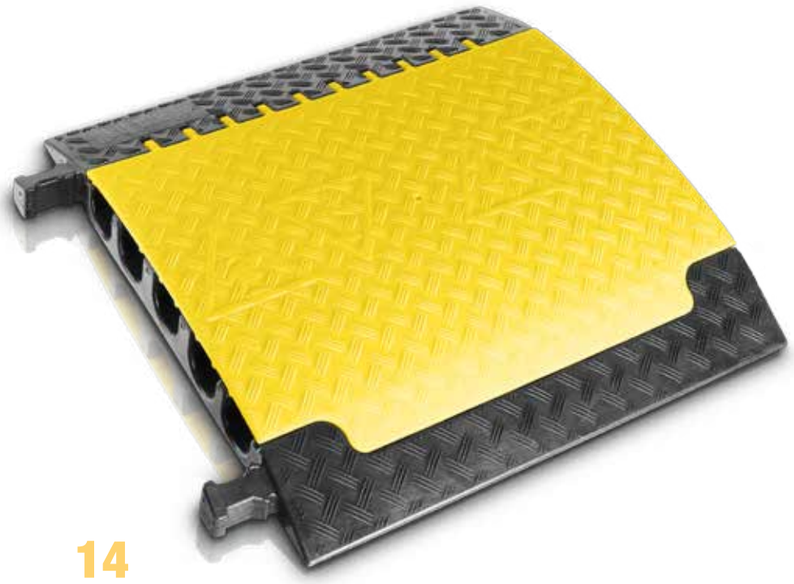



Art. No. **85510**



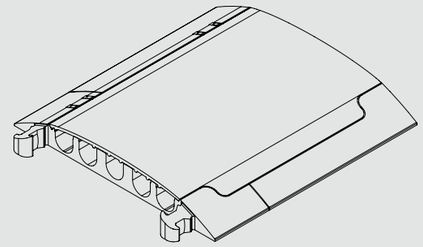

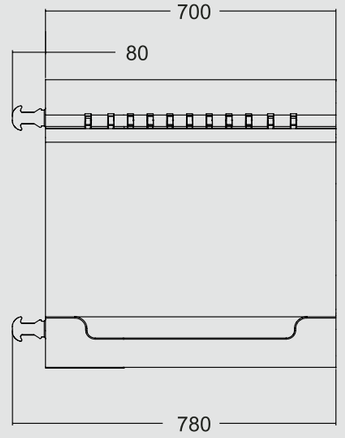

* dimensions in mm

RANGE OF APPLICATION

Trade fairs / walkways / marketplaces / Christmas markets / workshops / warehouses / shopping centres / department stores / construction sites, streets, etc.

DEFENDER® III

3 BIG CHANNELS – MOST POPULAR

Featuring a 73 mm profile, 45° curve and end ramps with detachable dovetail connectors the Defender® III cable protection system provides versatile cable routing and safe crossing for vehicles and pedestrians. With 3 medium large channels, built-in handles for easy portability and a 5 t per 20 x 20 cm load capacity the 73 mm profile Defender® III cable protectors are the perfect all-round choice for a wide variety of applications including heavy wheeled traffic, construction sites, warehouses, carnivals, fairs, trade shows, exhibitions, shopping malls and music events.

SPECIFICATIONS:

Art. No.:	85002
Product:	3-channel cable protector
Channel W x H:	52 x 49 mm (channels 1 and 3), 45 x 50 mm (channel 2)
Material:	TPU (Thermoplastic Polyurethane)
Shore A hardness:	88 ± 4
Load capacity:	5 t / 20 x 20 cm (typical tyre footprint area)
Fire rating:	B2 (B1 also available)
Resistant to:	most acids, oils, gasoline
Operating temperature:	-30° to +60° C
Length:	1.000 mm
Width:	600 mm
Height:	73 mm
Weight:	22 kg

DEFENDER® III 45° Curve with detachable lid and 2 dovetail connectors
Art. No.: **85009**
DEFENDER® III End Ramp
Art. No.: **85008**
DEFENDER® III Dovetail Connector
Art. No.: **85004**



ALSO AVAILABLE AS LUX VERSION!
Art. No. 85002LUX
More Info page 8.



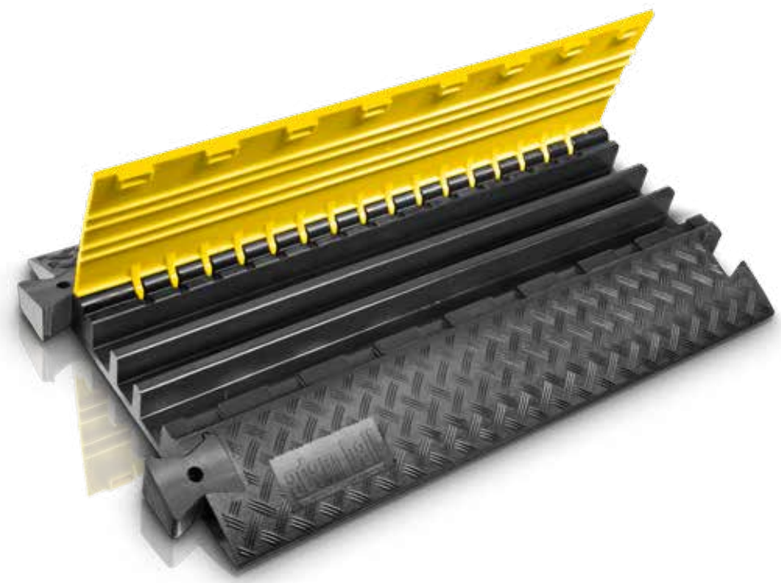

Art. No. **85009**



Art. No. **85004**



Art. No. **85008**



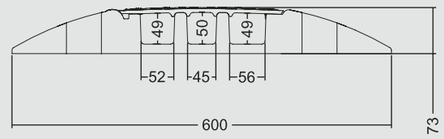

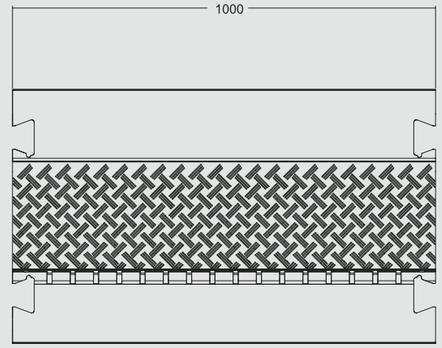

* dimensions in mm

RANGE OF APPLICATION

Trade fairs / walkways / marketplaces / Christmas markets / workshops / warehouses / shopping centres / department stores / construction sites, streets, etc.

DEFENDER® MIDI

5 MEDIUM CHANNELS – THE SOLUTION FOR NEARLY ANYTHING

The Defender® MIDI cable protection system has been designed for maximum routing versatility and secure crossing. Featuring a low profile, 5 t per 20 x 20 cm load capacity, integrated connectors and handles the straight ramp, 45° curve and end ramps are easily linked to form a continuous cable guard while five 34 x 36 mm channels allow for individual sound, lighting and power line arrangement. Defender® MIDI cable protectors are ideal for a multitude of usages such as heavy wheeled traffic, construction sites, warehouses, carnivals, fairs, trade shows, exhibitions, shopping malls, broadcasting and music events. Available system option: wheelchair ramp (see page 25).

SPECIFICATIONS:

Art. No.:	85300
Product:	5-channel cable protector
Channel W x H:	34 x 36 mm (channels 1 to 5)
Material:	TPU (Thermoplastic Polyurethane)
Shore A hardness:	88 ± 4
Load capacity:	approx. 5 t / 20 x 20 cm (typical tyre footprint area)
Fire rating:	B2 (B1 also available)
Resistant to:	most acids, oils, gasoline
Operating temperature:	-30° to +60° C
Length:	890 mm
Width:	542 mm
Height:	52 mm
Weight:	11.5 kg

DEFENDER® MIDI 45° curve for Defender Midi
Connectors detachable, connectors can be mounted on both sides.
Art. No.: **85310**

DEFENDER® MIDI End Ramp, connectors included
Art. No.: **85308**

DEFENDER® Wheelchair Ramp
Art. No.: **85305SET** (for detailed information see page 25)

ALSO AVAILABLE AS LUX VERSION!
Art. No. 85300LUX
More Info page 8.

WHEEL CHAIR RAMP AVAILABLE ON PAGE 24!
Art. No. 85305SET





Art. No. **85310**



Art. No. **85308**



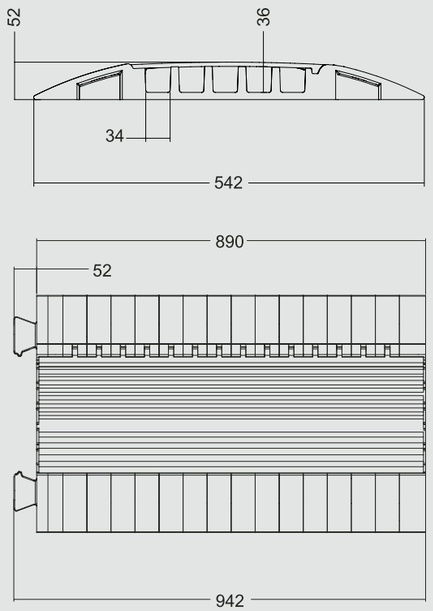

* dimensions in mm

RANGE OF APPLICATION

Trade fairs / walkways / marketplaces / Christmas markets / workshops / warehouses / shopping centres / department stores / construction sites, streets, etc.

DEFENDER® MIDI 4C

4 MEDIUM CHANNELS – 1 BIG CHANNEL FOR FIRE HOSE

With one wide 80 x 36 mm channel and three 34 x 36 mm ducts the Defender® MIDI 4C cable protection system is the perfect choice when a layflat hose must be run next to separate sound, lighting and power lines. Featuring integrated connectors, the low profile and 5 t per 20 x 20 cm load capacity of the Defender® MIDI system MIDI 4C protectors are suitable for heavy wheeled traffic, construction sites, warehouses, carnivals, fairs, trade shows, exhibitions, shopping malls and music events.

SPECIFICATIONS:

Art. No.:	85301
Product:	4-channel cable protector
Channel W x H:	34 x 36 mm (channels 1 to 3), 80 x 36 mm (channel 4)
Material:	TPU (Thermoplastic Polyurethane)
Shore A hardness:	88 ± 4
Load capacity:	Approx 5 tons per typical tyre imprint (20 x 20 cm)
Fire rating:	B2 (B1 also available)
Resistant to:	most acids, oils, gasoline
Operating temperature:	-30° to +60° C
Length:	890 mm
Width:	542 mm
Height:	52 mm
Weight:	11.5 kg

DEFENDER® MIDI 4C End Ramp, connectors included
Art. No.: **85308**

ALSO AVAILABLE AS LUX VERSION!
Art. No. 85301LUX
More Info page 8.





Art. No. **85308**



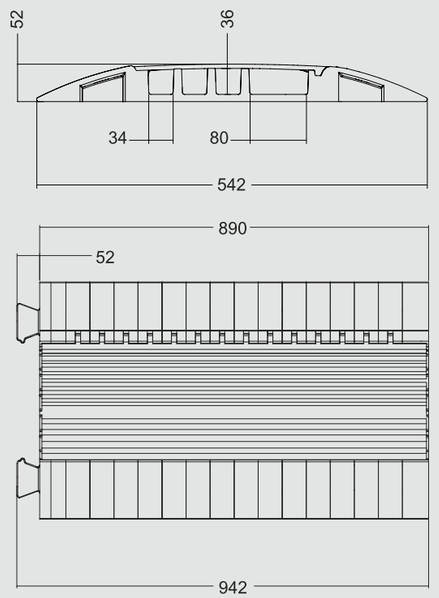

* dimensions in mm

RANGE OF APPLICATION

Trade fairs / walkways / marketplaces / Christmas markets / workshops / warehouses / shopping centres / department stores / construction sites, streets, etc.

DEFENDER® MINI

3 SMALL CHANNELS – THE LIGHTWEIGHT CHAMPION

Available with a choice of black or yellow lids the Defender® MINI cable protection system is ideal for both indoor and outdoor use. The compact, low profile 3-channel ramp with integrated dog bone connectors features a slip-resistant underside for superior grip on a wide variety of surfaces. Male and female end ramps are available to provide secure and tidy cable entry and exit. With a 2 t per 20 x 20 cm load capacity Defender® MINI protectors support lightweight vehicles, carts and pedestrian traffic. Applications include carnivals, fairs, trade shows, exhibitions, shopping malls, warehouses, stages, studios and broadcasting. Not suitable for road traffic.

SPECIFICATIONS:

Art. No.:	85200
Product:	3-channel cable protector
Channel W x H:	35 x 30 mm (channels 1 and 3), 35 x 35 mm (channel 2)
Material:	TPU (Thermoplastic Polyurethane)
Shore A hardness:	88 ± 4
Load capacity:	approx. 2 t / 20 x 20 cm (typical tyre footprint area)
Fire rating:	B2 (B1 also available)
Resistant to:	most acids, oils, gasoline
Operating temperature:	-30° to +60° C
Length:	1.000 mm
Width:	290 mm
Height:	48 mm
Weight:	5 kg

DEFENDER® MINI End Ramp female
Art. No.: **85208F**

DEFENDER® MINI End Ramp male
Art. No.: **85208M**

ALSO AVAILABLE WITH BLACK LID!
Art. No. 85200BLK
AS LUX VERSION!
Art. No. 85200LUX
More Info page 8.

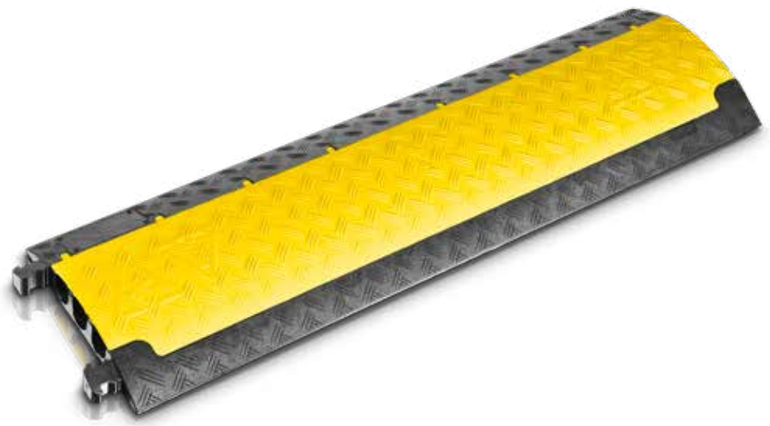



Art. No. **85208F**



Art. No. **85208M**



Art. No. **85210L**



Art. No. **85210R**



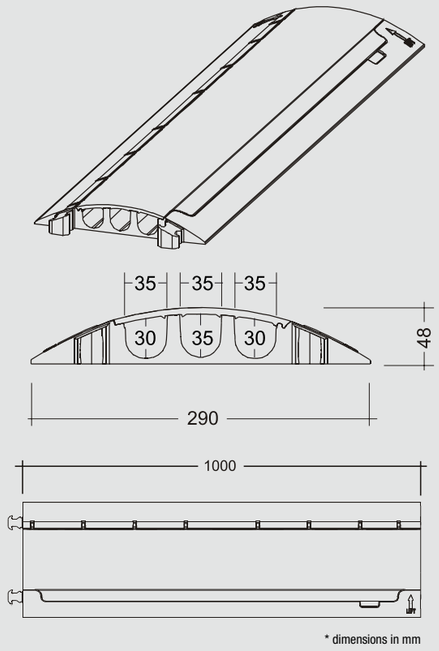

* dimensions in mm

RANGE OF APPLICATION

Trade fairs / walkways / marketplaces / Christmas markets / workshops / warehouses / shopping centres / department stores / construction sites, streets, etc.

DEFENDER® NANO

6 SLIM CHANNELS – DISCRETE OUTDOOR / INDOOR PROTECTION

Providing convenient wheelchair access the Defender® NANO cable protection system is the ultra low profile solution for a wide range of indoor and outdoor applications. Available with black or yellow lid Defender® NANO protectors feature 6 channels for clean and tidy cable arrangement, T-shaped connectors and a 2 t per 20 x 20 cm load capacity to support lightweight vehicles, carts and pedestrian traffic but also forklifts and pallet trucks thanks to their low height design. Male and female end ramps are available to provide secure cable entry and exit.

The Defender® NANO protection system is ideal for carnivals, fairs, trade shows, exhibitions, shopping malls, warehouses, stages, studios and broadcasting. Not suitable for road traffic.

SPECIFICATIONS:

Art. No.:	85150
Product:	6-channel cable protector
Channel W x H:	17 x 18 mm (channels 1 to 6)
Material:	TPU (Thermoplastic Polyurethane)
Shore A hardness:	88 ± 4
Load capacity:	approx. 2 t / 20 x 20 cm (typical tyre footprint area)
Fire rating:	B2 (B1 also available)
Resistant to:	most acids, oils, gasoline
Operating temperature:	-30° to +60° C
Length:	1.000 mm
Width:	280 mm
Height:	32 mm
Weight:	4.37 kg

DEFENDER® NANO End Ramp female
Art. No.: **85158F**

DEFENDER® NANO End Ramp male
Art. No.: **85158M**

ALSO AVAILABLE WITH BLACK LID!
Art. No. 85150BLK
AS LUX VERSION!
Art. No. 85150LUX
More Info page 8.

With black lid
Art. No. 85150BLK



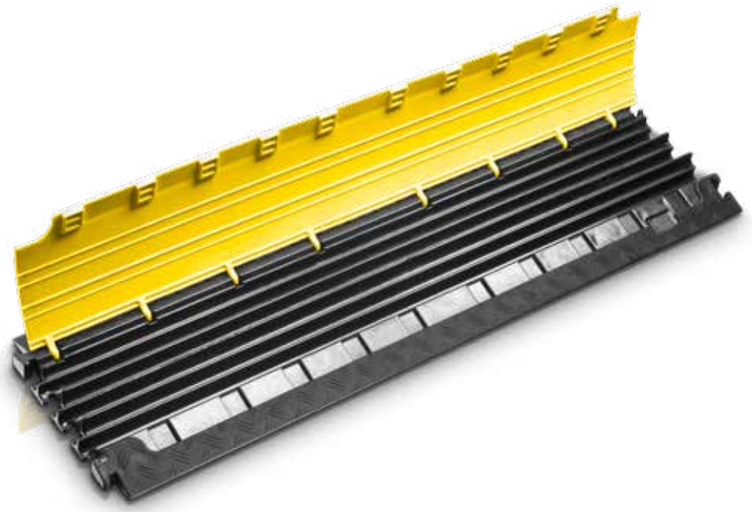

Art. No. **85158F**



Art. No. **85158M**



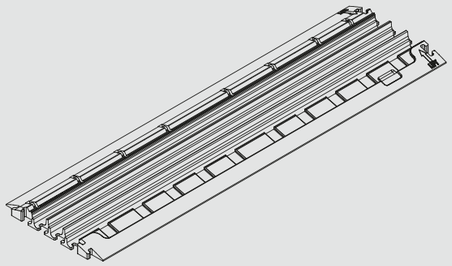

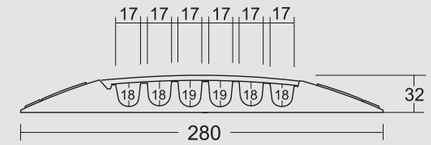

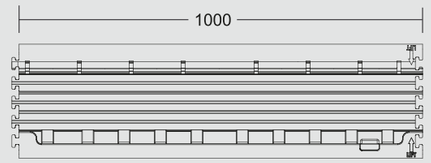

* dimensions in mm

RANGE OF APPLICATION

Mainly in halls, at trade fairs, etc.

DEFENDER® COMPACT

7 SMALL CHANNELS – THE DROP OVER SOLUTION

The Defender® COMPACT drop-over cable protector is a durable light-duty solution to guard cable lines and prevent tripping hazards. Featuring a ribbed surface for excellent traction and integrated dovetail connectors Defender® COMPACT drop-over cable ramps are suitable for pedestrian traffic in offices, shopping malls, conference facilities, trade shows and markets as well as stage and studio applications.

DEFENDER® COMPACT WITH BASE (85100 + 85103)
Attached to the optional 5-channel base the Defender® COMPACT drop-over cable protector transforms into a heavy-duty guard with high load capacity to support trucks, forklifts and other vehicles. The ribbed surface provides excellent traction while integrated connectors on the base and drop-over facilitate lining up to form a rigid continuous protection system. The range of applications includes construction sites, carnivals, fairs, trade shows, exhibitions, warehouses, shopping malls and music events.

SPECIFICATIONS:

Art. No.:	85100	85103 (base), 85100 (drop-over)
Product:	7-channel cable protector	5-channel cable protector
Channel W x H:	28 x 23 mm (channels 1 and 7), 28 x 27 mm (channels 2 and 6), 28 x 29 mm (channels 3 and 5), 28 x 30 mm (channel 4)	22 x 21 mm (channels 1 to 5)
Material:	TPU (Thermoplastic Polyurethane)	TPU (Thermoplastic Polyurethane)
Shore A hardness:	88 ± 4	88 ± 4
Load capacity:	see description above	see description above
Fire rating:	B2 (B1 also available)	B2 (B1 also available)
Resistant to:	most acids, oils, gasoline	most acids, oils, gasoline
Operating temperature:	-30° to +60° C	-30° to +60° C
Length:	800 mm	800 mm
Width:	430 mm	430 mm
Height:	40 mm	40 mm
Weight:	3.5 kg	7 kg (base with drop-over)

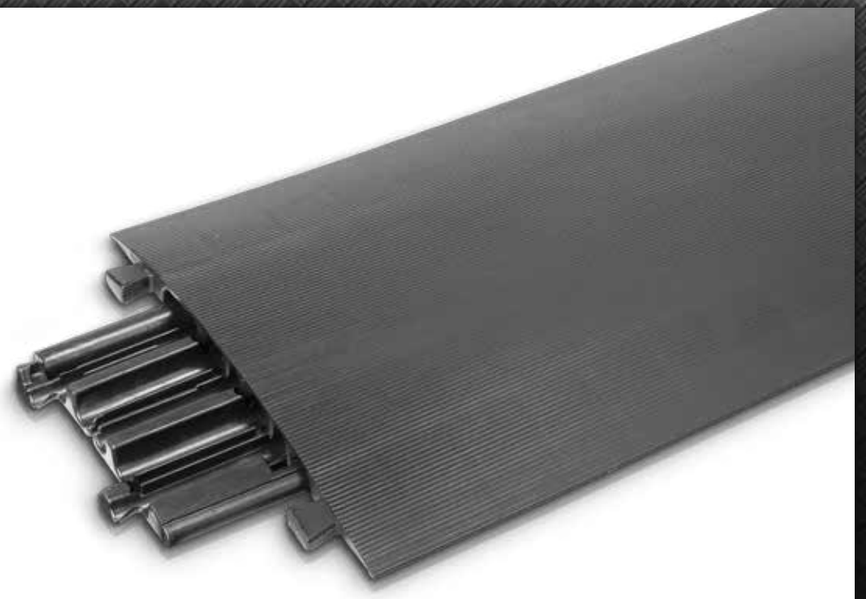



Art. No. **85100** (bottom view)



Art. No. **85103**



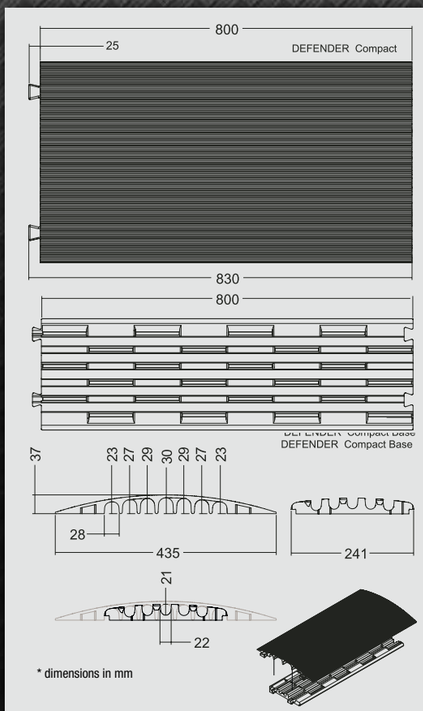

RANGE OF APPLICATION
Mainly in offices, halls, at trade fairs, etc.

DEFENDER® OFFICE

4 MINI CHANNELS – INDOOR & DESIGN SOLUTION

Available with a choice of black, grey and yellow colors the Defender® OFFICE cable protection system is the elegant solution for secure pedestrian traffic in conference facilities, exhibitions, public buildings, retail outlets, shopping malls, trade shows and offices. Featuring straight, 90° and end ramps with cutting guides for length adjustment, zigzag connection and bolt holes for ground fixing the Defender® OFFICE system provides versatile cable routing while preventing tripping hazards.

SPECIFICATIONS:

Art. No.:	85160 (Black) / 85160GREY (Grey) / 85160YEL (Yellow)
Product:	4-channel cable protector
Channel W x H:	10 x 10 mm (channels 1 and 4), 12 x 12 mm (channels 2 and 3)
Material:	TPU (Thermoplastic Polyurethane)
Shore A hardness:	92 ± 4
Load capacity:	2 t / 20 x 20 cm (typical tyre footprint area)
Fire rating:	B2
Resistant to:	acids, oils, gasoline
Operating temperature:	-30° to +60° C
Length:	870 mm
Width:	120 mm
Height:	20 mm
Weight:	1.24 kg

DEFENDER® OFFICE 90° Curve
Art. No.: **85161** (black), **85161GREY**, **85161YEL**

DEFENDER® OFFICE End Ramp
Art. No.: **85168** (black), **85168GREY**, **85168YEL**

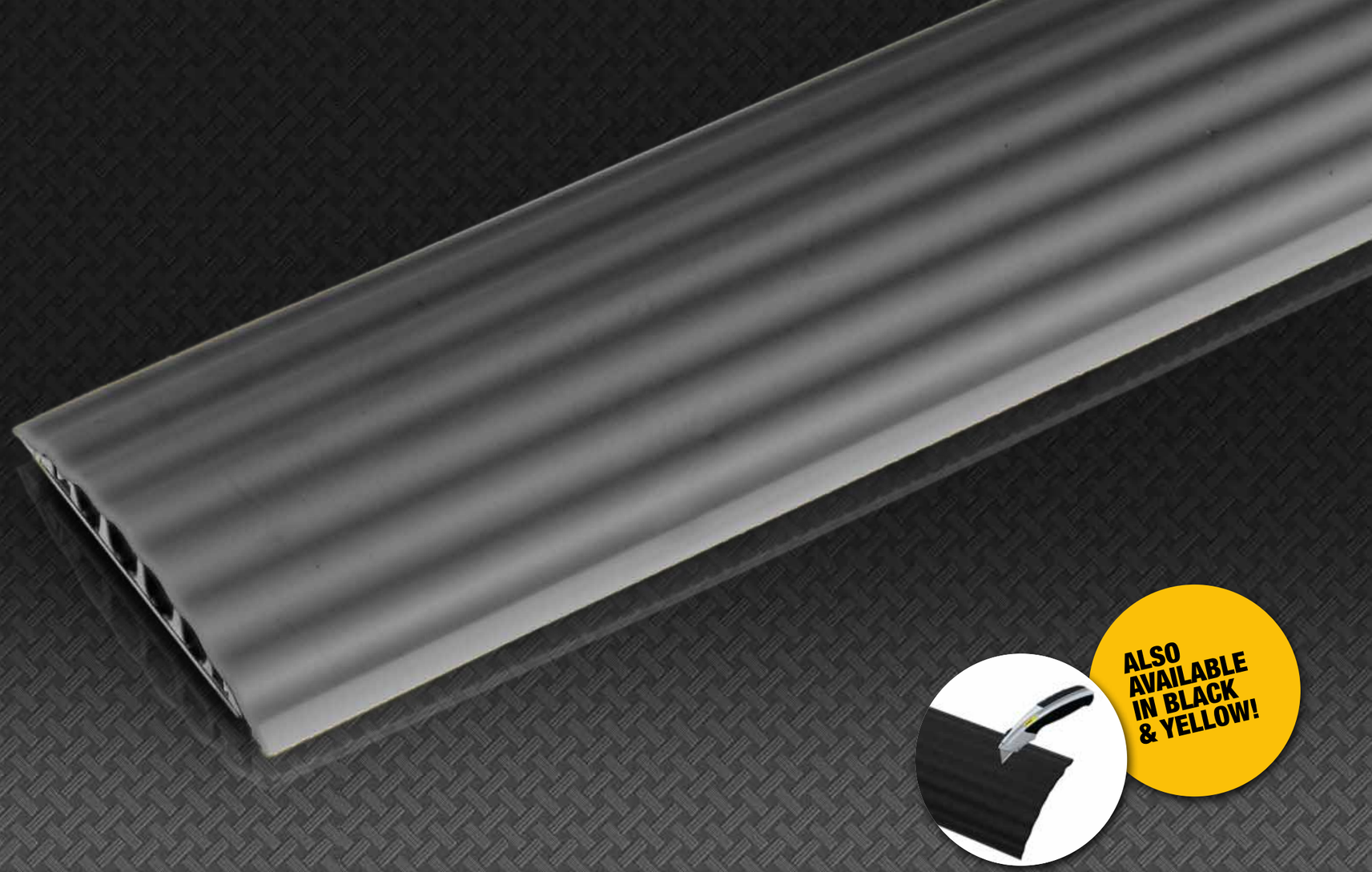

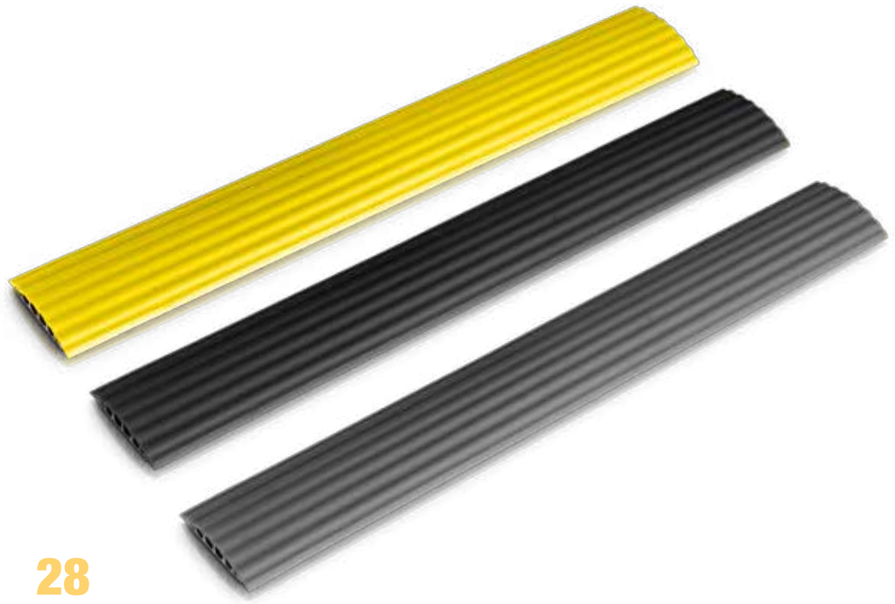



Art. No. **85161GREY**
(90° curve)



Art. No. **85168GREY**
(End ramp)



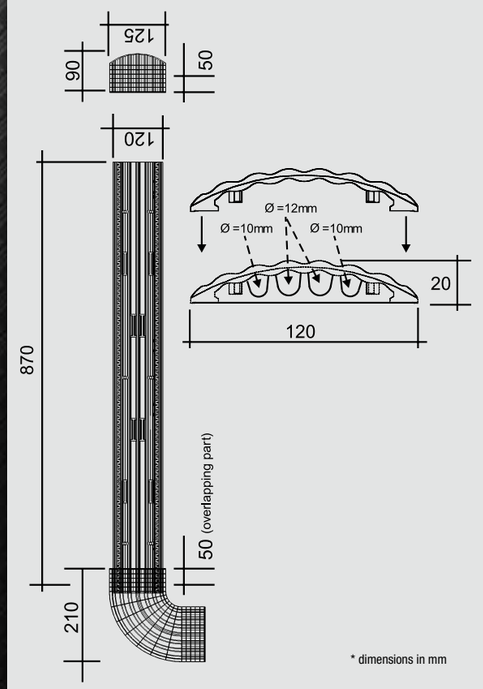

* dimensions in mm

DEFENDER®
WHEELCHAIR RAMP

THE PERFECT ADD ON FOR DEFENDER MIDI

The Defender® WHEELCHAIR RAMP has been designed for use with the Defender® MIDI cable protection system also providing easy access for walking frames, trolleys and dollies. The set includes a Defender® MIDI cable guard with blue lid and bolt holes for the required ground fixing, 6 threshold ramps and 4 side slants. Made from acid, oil, solvent and gasoline resistant TPU (Thermoplastic Polyurethane) the Defender® WHEELCHAIR RAMP components are also available individually for ramp width extension. Please note: the Defender® Wheelchair Ramp does not support vehicle traffic.

DEFENDER® WHEELCHAIR RAMP Set
Art. No.: 85305SET

DEFENDER® WHEELCHAIR RAMP Components
Art. No.: **85300BLUE** Defender® MIDI Cable Protector
Art. No.: **85306** Threshold Ramp
Art. No.: **85307L** Side Slant left
Art. No.: **85307R** Side Slant right

Art. No. **85300BLUE**
(Midi Cable Protector)



Art. No. **85306**
(Ramp Module)

Art. No. **85307L**
(Left Side Piece)

Art. No. **85307R**
(Right Side Piece)

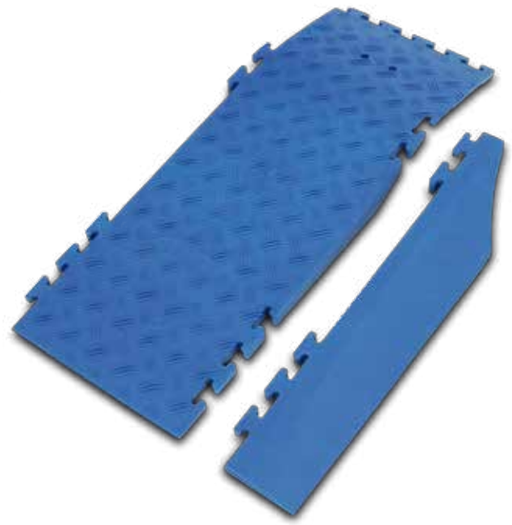

Art. No. **85305SET**
(Wheelchair Ramp Set)

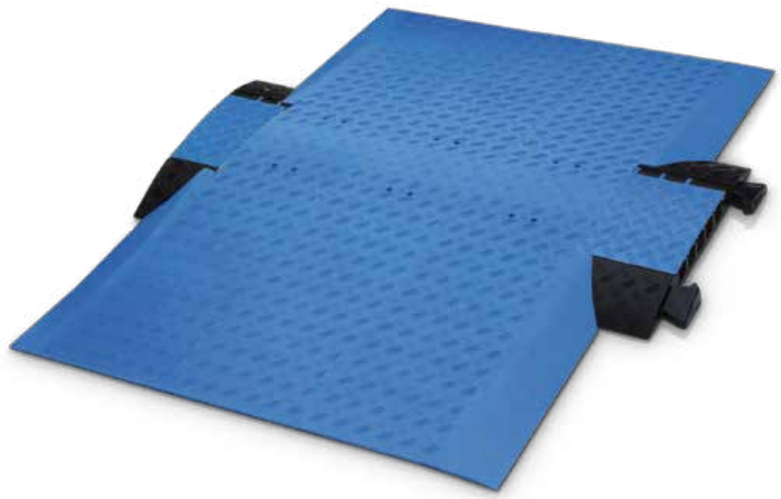

DEFENDER® BOX

THE SMART LOGISTIC STORAGE SOLUTION

The Defender® BOX is the ideal solution for transporting and storing Defender® cable protection systems.
The sturdy design features a EUR-pallet size base made of heavy duty plastic and hinged steel grate sides for easy loading.
For additional convenience the Defender® BOX is stackable and collapsible.

SPECIFICATIONS:

Art. No.:	85BOX
Product:	storage and transport box
Material:	PE and steel with lacquer coating
Load capacity:	≤ 1 t
Dimensions (W x H x D):	1250 x 1285 x 840 mm
Weight:	50.5 kg

For loading plan see www.adamhall.com!







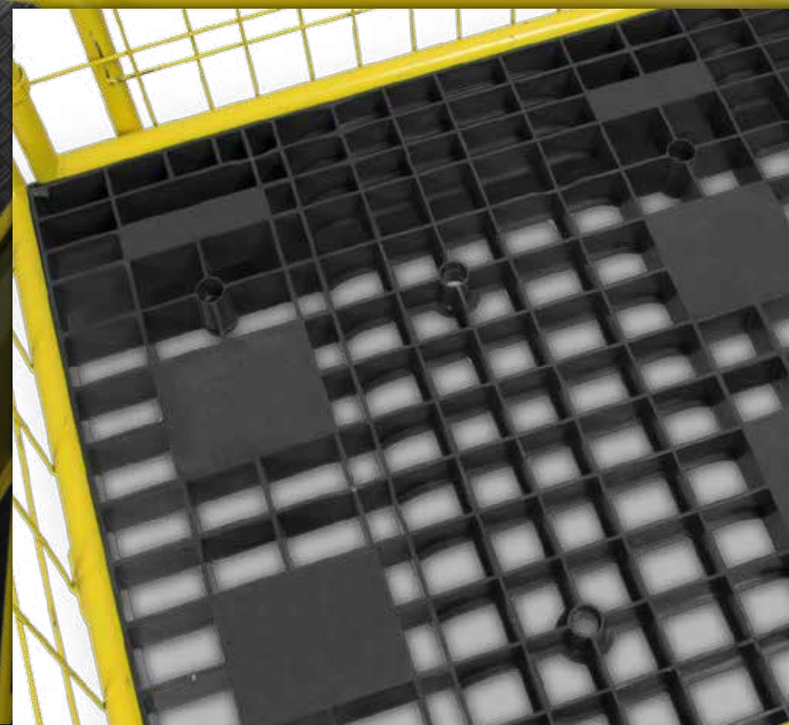

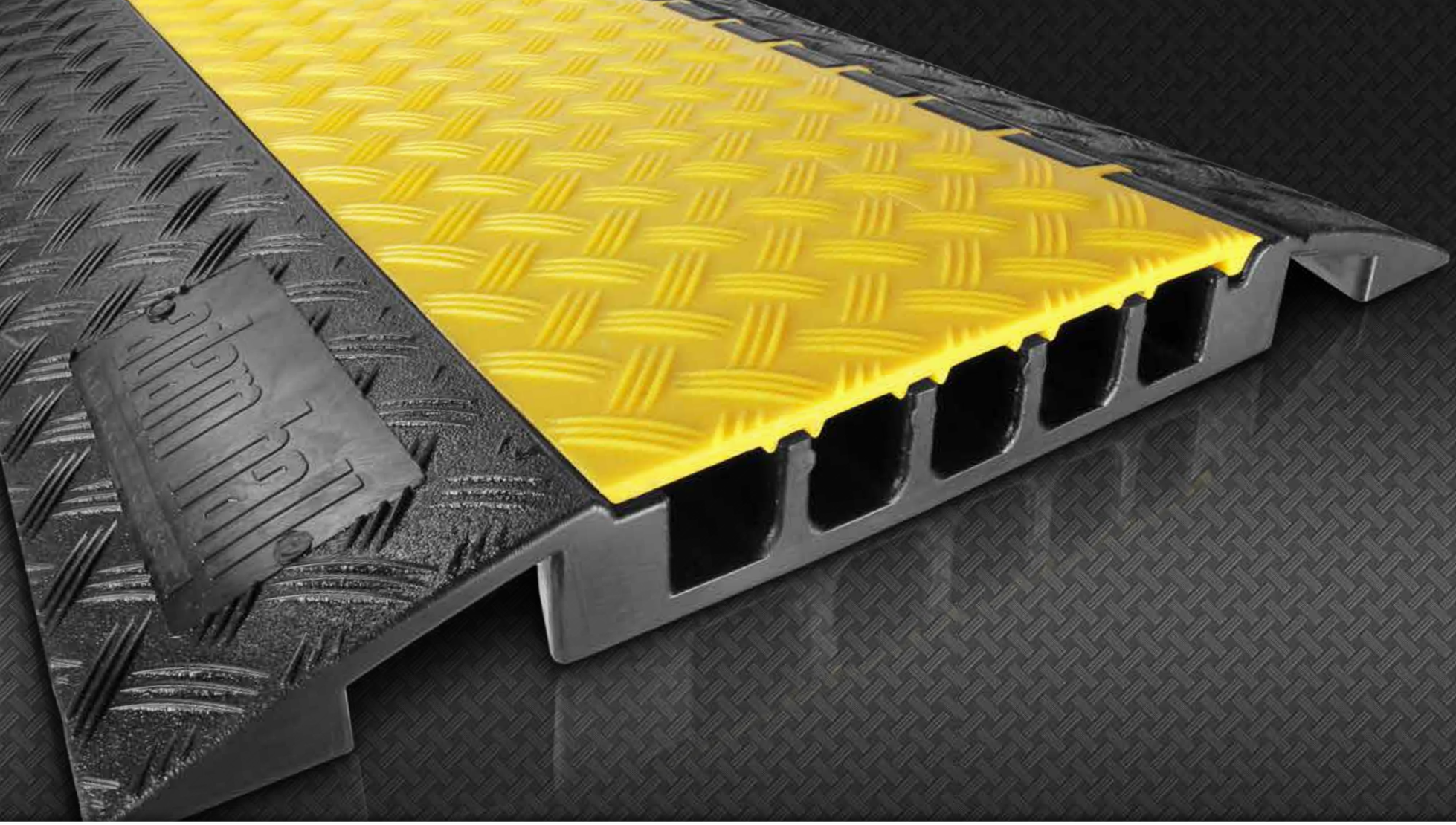

REFERENCES

FIND MORE REFERENCES
AT WWW.**DEFENDER-PROTECTS**.COM

DEFENDER®

CABLE PROTECTION SYSTEMS

THE INDUSTRY & EVENT STANDARD

ah def 04/2016 10.0000

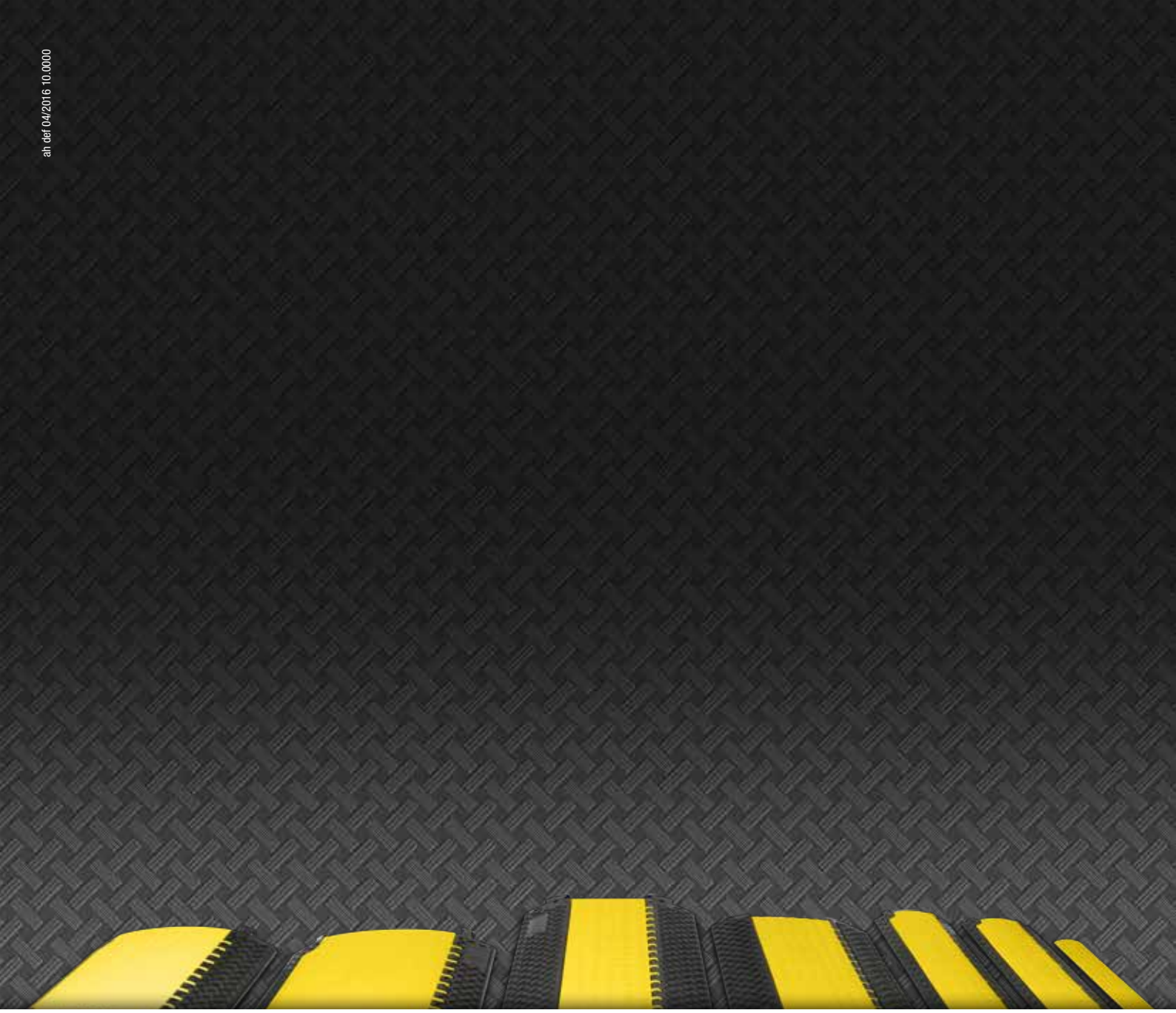

DEFENDER®

CABLE PROTECTION SYSTEMS

THE INDUSTRY & EVENT STANDARD

www.**defender-protects**.com

adam hall

Defender is a brand of the Adam Hall Group.

Adam Hall GmbH
Headquarters
Daimlerstr. 9
D-61267 Neu-Anspach
Germany
Tel.: (+49) 60 81 / 94 19 0
Fax: (+49) 60 81 / 94 19 1000
e-mail: mail@adamhall.com

Adam Hall Asia
Singapore
Mobile: (+65) 97727486
Tel.: (+65) 6366 4031
asia@adamhall.com

Adam Hall Southern Europe
France/Spain/Portugal/Italy
Tel. Spain: (+34) 93 363 53 63
Tel. France: (+33) 4 67 66 27 87
Tel. Italy: 0800 87 39 16
mail.sp@adamhall.com
mail.fr@adamhall.com
mail.pt@adamhall.com
mail.it@adamhall.com

Adam Hall UK
Tel.: (+44) 0 17 02 61 39 22
mail@adamhall.co.uk

Adam Hall Benelux
Tel.: +31 (0) 611281874
mail.benelux@adamhall.com

Adam Hall Scandinavia
Tel.: (+45) 36 70 05 27
mail.dk@adamhall.com

Adam Hall Poland
Tel.: + 48 (0) 782 510 410
mail.pl@adamhall.com

Adam Hall South Eastern Europe
Slovenia/Croatia/Hungary
Tel.: (+386) 51 478 581
mail.si@adamhall.com