Overview

HP ProBook 445 14 inch G11 Notebook PC



Front

1. Internal Microphone (2)
2. Webcam LED
3. Webcam
4. Webcam LED
5. Touchpad

Overview

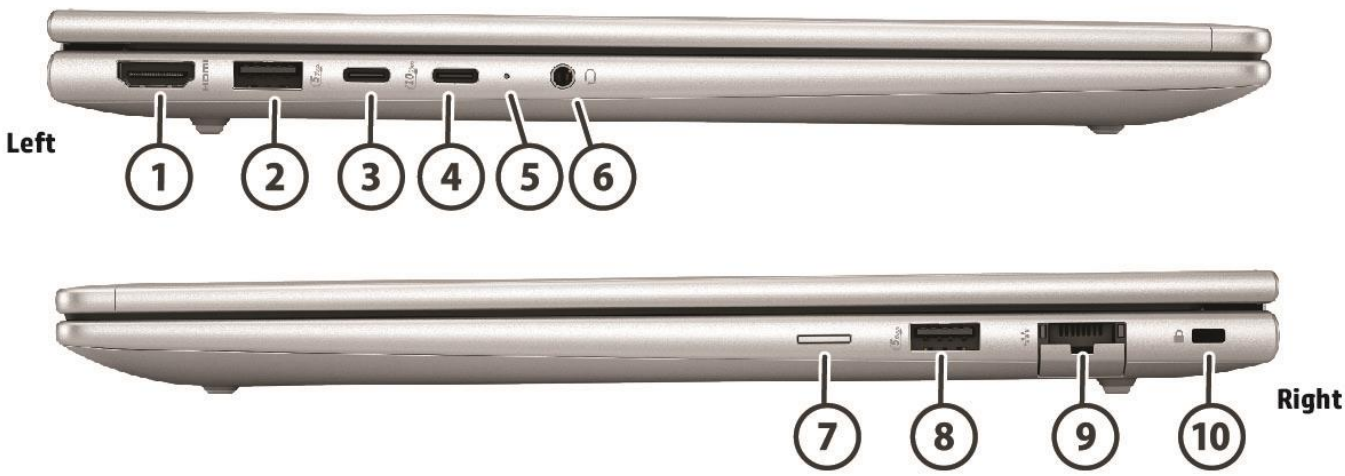

Sides

1. HDMI 2.1
2. Super Speed USB Type-A 5Gbps signaling rate Power charging
3. Super Speed+ USB Type-C® 10Gbps signaling rate USB Power Delivery DisplayPort™ 1.4
4. Super Speed+ USB Type-C® 10Gbps signaling rate USB Power Delivery DisplayPort™ 1.4
5. Power Indicator LED
6. Headphone/mic combo jack
7. Nano SIM card slot (Optional)
8. Super Speed USB Type-A 5Gbps signaling rate Data only
9. RJ45 Ethernet port
10. Security lock slot (Integrated)

Technical Specifications

PRODUCT NAME

HP ProBook 445 14 inch G11 Notebook PC

OPERATING SYSTEMS

Preinstalled

Windows 11 Home - HP recommends Windows 11 Pro for business
Windows 11 Home Single Language - HP recommends Windows 11 Pro for business
Windows 11 Pro [1]
Windows 11 Pro Education [1]
Windows 11 Pro (Windows 11 Enterprise or Windows 10 Enterprise available with a Volume Licensing Agreement) [1]
FreeDOS

1. Not all features are available in all editions or versions of Windows. Systems may require upgraded and/or separately purchased hardware, drivers, software or BIOS update to take full advantage of Windows functionality. Windows is automatically updated and enabled. High speed internet and Microsoft account required. ISP fees may apply and additional requirements may apply over time for updates. See http://www.windows.com.

PROCESSORS

Processor [2,3,4,5,6]	Cores	Threads	L3 Cache	Max boast Frequency [5]	Base Frequency
AMD Ryzen™ 7-7735U	8 cores	16	16 MB	4.75 GHz	2.70 GHz
AMD Ryzen™ 5-7535U	6 cores	12	16 MB	4.55 GHz	2.90 GHz
AMD Ryzen™ 3-7335U	4 cores	8	8 MB	4.30 GHz	3.00 GHz

Processor Family

AMD Ryzen™ 7 processor

AMD Ryzen™ 5 processor

AMD Ryzen™ 3 processor

2. Multicore is designed to improve performance of certain software products. Not all customers or software applications will necessarily benefit from use of this technology. Performance and clock frequency will vary depending on application workload and your hardware and software configurations. AMD's numbering is not a measurement of clock speed.
3. Processor speed denotes maximum performance mode; processors will run at lower speeds in battery optimization mode.
4. Max Boost clock frequency performance varies depending on hardware, software and overall system configuration.
5. In accordance with Microsoft's support policy, HP does not support the Windows 8 or Windows 7 operating system on products configured with Intel and AMD 7th generation and forward processors or provide any Windows 8 or Windows 7 drivers on http://www.support.hp.com .
6. Features and software that require a NPU may require software purchase, subscription or enablement by a software or platform provider, and third party software may have specific configuration or compatibility requirements. Performance varies by use, configuration, and other factors.

Technical Specifications

GRAPHICS

Integrated
AMD Radeon™ Graphics

Supports
UMA: Support HDMI 2.1 [7]

7. HDMI cable sold separately.

DISPLAY

Non-Touch
35.6 cm (14") diagonal, WQXGA (2560 x 1600), Bent, LCD, UWVA, anti-glare, LED, 500 nits, DCI-P3 100%[8,9,10,11]
35.6 cm (14") diagonal, WUXGA (1920 x 1200), Bent, LCD, UWVA, anti-glare, WLED + Low Blue Light, 400 nits, low power, sRGB 100% [8,9,10,11]
35.6 cm (14") diagonal, WUXGA (1920 x 1200), Bent, LCD, UWVA, anti-glare, WLED, 300 nits, NTSC 45%[8,9,10,11]

Touch
35.6 cm (14") diagonal, WUXGA (1920 x 1200), Bent touch UWVA anti-glare, 300 nits, NTSC 45% [8,9,10,11,12]

Display Size (Diagonal)
35.6 cm (14.0")

8. HD content required to view HD images.
9. Sold separately or as an optional feature.
10. Resolutions are dependent upon monitor capability, and resolution and color depth settings.
11. CODEC H.265/HEVC (High Efficiency Video Coding) is disabled on this platform.
12. Actual brightness will be lower with touchscreen.

DOCKING (Sold Separately)

Docking station model #1	HP USB-C Dock G5
Docking station model #2	HP Thunderbolt™ 120W G4 Dock

For additional aftermarket options and docking specs please see page 32.

Technical Specifications

STORAGE AND DRIVES

Primary Storage
1 TB PCIe® Gen4x4 NVMe™ SSD Value [13]
512 GB PCIe® Gen4x4 NVMe™ SSD Value [13]
256 GB PCIe® Gen4x4 NVMe™ SSD Value [13]

Secondary M.2 Storage (Optional) [14]
256GB 2230 PCIe NVMe™ 2nd SSD Value [13]

13. For storage drives, GB = 1 billion bytes. TB = 1 trillion bytes. Actual formatted capacity is less. Up to 30 GB (for Windows 10 and 11) is reserved for system recovery software.
14. Secondary SSD slot (M.2 2230 form factor; Optional) is used for data storage only, not used for OS deployment.

MEMORY

Maximum Memory
32GB DDR5-4800 (2 x 16 GB) MT/s Memory [15]

Memory
32GB DDR5-4800 (2 x 16 GB) MT/s RAM [15]
16GB DDR5-4800 (1 x 16 GB) MT/s RAM [15]
16GB DDR5-4800 (2 x 8 GB) MT/s RAM [15]
8GB DDR5-4800 (1 x 8 GB) MT/s RAM [15]

Memory Slots
2 SODIMM
System runs at 4800 MT/s
Supports Dual Channel Memory[15]

15. Due to the non-industry standard nature of some third-party memory modules, we recommend HP branded memory to ensure compatibility. If you mix memory speeds, the system will perform at the lower memory speed.

Technical Specifications

NETWORKING/COMMUNICATIONS

Ethernet
Realtek RTL8111HSH 10/100/1000 Integrated NIC [16]

WLAN
Realtek 8852CE Wi-Fi 6E Bluetooth® 5.3 wireless card WLAN [17]
Mediatek RZ616 Wi-Fi 6E Bluetooth® 5.3 wireless card AIM-T WLAN [17]

WWAN
HP 4000 4G LTE-Advanced Pro [18]

Miracast
Native Miracast Support [19]

16. The term "10/100/1000" or "Gigabit" Ethernet indicates compatibility with IEEE standard 802.3ab for Gigabit Ethernet, and does not connote actual operating speed of 1 Gb/s. For high-speed transmission, connection to a Gigabit Ethernet server and network infrastructure is required.
17. Wi-Fi 6E requires a Wi-Fi 6E router, sold separately, to function in the 6GHz band. Availability of public wireless access points limited. Wi-Fi 6E is backwards compatible with prior 802.11 specs. And available in countries where Wi-Fi 6E is supported.
18. Gigabit-class 4G LTE module is optional and must be configured at the factory. Module designed for up to 1 Gbps download speeds as carriers deploy 5 carrier aggregation and 100Mhz channel bandwidth, requires activation and separately purchased service contract. Backwards compatible to HSPA 3G technologies. Check with service provider for coverage and availability in your area. Connection, upload, and download speeds will vary due to network, location, environment, network conditions, and other factors. 4G LTE not available on all products, in all regions."
19. Miracast is a wireless technology your PC can use to project your screen to TVs, projectors, and streaming.

AUDIO/MULTIMEDIA

Audio
Audio by Poly Studio
2 Integrated stereo speakers
2 Integrated dual array microphone

Speaker Power
2W / 4 ohm per speaker

Camera
5MP+Infrared camera [8,9]
FHD camera [8,9]

Sensors
Hall Effect Sensor
Thermal Sensor
Fingerprint Sensor (optional)
HP Tamper Lock

8. HD content required to view HD images.
9. Sold separately or as an optional feature.

KEYBOARDS/POINTING DEVICES/BUTTONS & FUNCTION KEYS

Keyboard
HP Standard Notebook Keyboard spill-resistant, Durakey keyboard. [20]
HP Standard Notebook Keyboard spill-resistant, Backlit, Durakey keyboard. [20]

Pointing Device
Clickpad with multi-touch gesture support
Microsoft Precision Touchpad Default Gestures Support

Function Keys
ESC - System information
F1 - Display Switching
F2 - Blank
F3 - Brightness Down
F4 - Brightness Up
F5 - Blank or Backlit Toggle
F6 - Audio Mute
F7 - Volume Down
F8 - Volume Up
F9 - Mic Mute
F10 - Play and Pause
F11 - HP Programmable Key
F12 - Home key
End
Insert
Delete
Power Button (with LED)
Microsoft Copilot [21]

Hidden Function Keys
Fn+R - Break, Fn+S - Sys Rq, Fn+C - Scroll Lock

20. Backlit keyboard is an optional feature.
21. Requires Windows 11 and an NPU. Timing of feature delivery and availability varies by market and device. Requires Microsoft account to log in. Where Copilot in Windows is not available, the Copilot key will lead to the Bing search engine. See http://aka.ms/WindowsAIFeatures

Technical Specifications

SOFTWARE AND SECURITY

Software
Adobe Offer [22]
Bing Search for IE11
Buy Microsoft Office (Sold separately)
HP Connection Optimizer
HP Easy Clean[23]
HP Easy Clean Keyboard Driver
HP Hotkey Support
HP Mac Address Manager
HP Notifications
HP PC Hardware Diagnostics UEFI
HP PC Hardware Diagnostics Windows
HP Power Manager with Battery Health Manager[24]
HP Privacy Settings
HP Services Scan [25]
HP Smart Support [26]
HP Support Assistant [27]
HSA Fusion for Commercial
HSA Telemetry for Commercial
Miro Offer [28]
myHP [29]
Poly Lens [30]

Manageability Features
HP Client Catalog (download) [31]
HP Client Management Script Library (download) [32]
HP Cloud Recovery [33]
HP Connect for Microsoft Endpoint Manager [34]
HP Driver Packs (download) [35]
HP Image Assistant (download) [36]
HP Manageability Integration Kit (download) [37]
HP Patch Assistant (download) [38]

Security Management
Secured-Core PC Enable [39]
HP Wolf Security for Business which includes:[40]
HP Sure Admin [41]
HP Sure Click [42]
HP Sure Recover Gen6 [43]
HP Sure Run Gen5 [44]
HP Sure Sense
HP Sure Start Gen7 [45]
HP Tamper Lock

Security- TPM
Model: Nuvoton NPCT760HABYX
TCG TPM 2.0

Technical Specifications

Firmware Version: 7.2.3.1
FIPS 140-2 Compliant: Yes

Model: Infineon SLB9672VU2.0 FW15.23
TCG TPM 2.0
Firmware Version: 15.23
FIPS 140-2 Compliant: Yes

BIOS
Absolute Persistence Module [46]
BIOS Update via Network
HP BIOSphere Gen6 [47]
HP DriveLock & Automatic DriveLock
HP Fingerprint Sensor [48]
HP Secure Erase [49]
HP Wake on WLAN

IPv6 Support

FirstNet Certified
Does the BIOS implement the ISO/IEC 19678:2015 (formerly NIST 800-147) guidelines?: Yes
UEFI version: 2.7
Class: 3

22. Click on Adobe icon in the start menu to take advantage of a 30 day trial membership of select Adobe software. The software is tied to the device and is not transferrable. You may also choose to enter your payment details to auto-renew and continue to use the software beyond the 30 day trial. See Adobe for complete details.
23. HP Easy Clean requires Windows 10 RS3 and higher and will disable the keyboard, touchscreen, and clickpad only. Ports are not disabled. See user guide for cleaning instructions.
24. HP Power Manager requires Windows 10 and higher and can be downloaded from the Microsoft Store. Depending on what version of HP Battery Health Manager (BHM) is available for your device, HP BHM may look at a number of factors to determine how to adjust battery charging over time to optimize battery health. HP BHM is preset to “Let HP Manage my Battery Charging” to allow the system to balance charging between battery health and battery duration. As Let HP Manage My Battery Charging adjusts charge capacity, the amount of run-time on battery will be reduced over time. HP may utilize BIOS updates to adjust BHM settings on select systems to optimize battery health and reduce exposure to those factors that can accelerate battery degradation. To update or change HP BHM settings and for complete details, see https://support.hp.com/us-en/document/ish_4449597-3519507-16
25. HP Services Scan is preinstalled and/or provided thru Windows Update and checks for service entitlement on each hardware device and downloads the applicable software agent automatically. To disable this feature, please follow the instructions at http://www.hpdaas.com/requirements. The HP Insights agent is a telemetry and analytics platform that provides critical data around devices and applications and is not sold as a standalone service. HP follows stringent GDPR privacy regulations and is ISO27001, ISO27701, ISO27017 and SOC2 Type2 certified for Information Security. Internet access with connection to the HP Insights agent is required. For full system requirements, please visit http://www.hpdaas.com/requirements. Not available in China.
26. HP Smart Support requires the HP agent to be installed. For more information about how to enable or to download HP Smart Support, please visit http://www.hp.com/smart-support. HP Services Scan is provided thru Windows Update and will check entitlement on each hardware device to determine if an HP agent-enabled service has been purchased, and will download applicable software automatically. The HP agent is a telemetry and analytics platform that provides critical data

around devices and applications and is not sold as a standalone service. HP follows stringent GDPR privacy regulations and is ISO27001, ISO27701, ISO27017 and SOC2 Type2 certified for Information Security. Internet access is required. For full system requirements or to disable this feature, please visit http://www.hpdaas.com/requirements.

27. HP Support Assistant is available on Windows. For more information, please visit http://www.support.hp.com/help/hp-support-assistant.

28. HP customers qualify for a 90 day trail of Miro, this offer ends September 2025. Complete terms and conditions are provided by Miro when accepting the offer.

29. Requires Windows 10 or higher OS.

30. Poly Lens Desktop requires a Windows OS.

31. HP Client Catalog can be downloaded from https://www.hp.com/us-en/solutions/client-management-solutions.html

32. HP Client Management Script Library can be downloaded from https://www.hp.com/us-en/solutions/client-management-solutions.html#tab=manageability-tools

33. HP Cloud Recovery is available for Z by HP, HP Elite and Pro desktops and laptops PCs with Intel® or AMD processors and requires an open, network connection. Note: You must back up important files, data, photos, videos, etc. before use to avoid loss of data. Detail please refer to: https://support.hp.com/us-en/computer

34. HP Connect for Microsoft Endpoint Manager is available from the Azure Market Place for HP Pro, Elite, Z and Point-of-Sale PCs managed with Microsoft Endpoint Manager. Subscription to Microsoft Endpoint Manager required and sold separately. Network connection required.

35. HP Driver Packs can be downloaded from https://www.hp.com/us-en/solutions/client-management-solutions/drivers-pack.html

36. HP Image Assistant can be downloaded from https://ftp.ext.hp.com/pub/caps-softpaq/cmit/HPIA.html

37. HP Manageability Integration Kit can be downloaded from https://www.hp.com/us-en/solutions/client-management-solutions.html#tab=manageability-tools

38. HP Patch Assistant available on select HP PCs with the HP Manageability Kit that are managed through Microsoft System Center Configuration Manager. HP Manageability Integration Kit can be downloaded from http://www8.hp.com/us/en/ads/clientmanagement/overview.html.

39. Secured-Core PC Enable requires an Intel® vPro®, AMD Ryzen™ Pro processor or Qualcomm® processor with SD850 or higher and requires 8 GB or more system memory. Secured-core PC is enabled from the factory.

40. HP Wolf Security for Business requires Windows 10 or 11 Pro or higher, includes various HP security features and is available on HP Pro, Elite, RPOS and Workstation products. See product details for included security features.

41. HP Sure Admin requires HP G8 or newer platforms, Windows 10 or higher, HP BIOS, HP Manageability Kit or KMS Service from http://www.hp.com/go/clientmanagement and HP Sure Admin Local Access Authenticator smartphone app from the Android or Apple store

42. HP Sure Click requires Windows 10 or 11 Pro or higher. See https://bit.ly/2PrLT6A_SureClick for complete details.

43. HP Sure Recover is available on select HP PCs and requires Windows 10 or Windows 11 and an open network connection. You must back up important files, data, photos, videos, etc. before using HP Sure Recover to avoid loss of data. Network based recovery using Wi-Fi is only available on select PCs.

44. HP Sure Run is available on select HP PCs and requires Windows 10 and higher.

45. HP Sure Start is available on select HP PCs and requires Windows 10 and higher

46. Absolute firmware module is shipped turned off and can only be activated with the purchase a license subscription and full activation of the software agent. License subscriptions can be purchased for terms ranging multiple years. Service is limited, check with Absolute for availability outside the U.S. Certain conditions apply. For full details visit: https://www.absolute.com/about/legal/agreements/absolute/

47. HP BIOSphere Gen6 features may vary depending on the platform and configuration.

48. HP Fingerprint Reader is an optional feature that requires Windows 10 or 11 and must be configured at purchase.

49. HP Secure Erase implements the methods outlined in the National Institute of Standards and Technology Special Publication 800-88r "Clear" sanitation method. HP Secure Erase does not support platforms with Intel® Optane™.

Technical Specifications

POWER

Power Supply
HP Standard 65W USB Type-C® adapter [50]
HP Standard 65W USB Type-C® Halogen Free adapter [50]
HP Standard 45W USB Type-C® adapter [50]

Battery
HP Long Life 3 cell, 56Whr Polymer [51,52]

Battery Recharge Time
Supports battery HP Fast Charge: approximately 50% in 30 minutes [53]

Power Cord
3-wired plug- 1.0m [50]

Battery life
Up to 14 hours with 56Whr battery (Benchmark: MobileMark25)
Processor: AMD REM-U R7 non-Vpro
Graphic: UMA
Panel: AUO WUXGA 400nit, Low Power
Storage: WD 256GB NVMe Value SSD
Memory: Hynix DDR5 8GB *1
WLAN: Realtek 8852CE Champagne Bluetooth® Combo
WWAN: No [54]

50. Availability may vary by country.
51. Battery is internal and not replaceable by customer. Serviceable by warranty.
52. Actual battery Watt-hours (Wh) will vary from design capacity. Battery capacity will naturally decrease with shelf life, time, usage, environment, temperature, system configuration, loaded apps, features, power management settings and other factors.
53. Recharges your battery up to 50% within 30 minutes when the system is off or in standby mode. Power adapter minimum of 65 watts required for battery capacities 56Whr or less. Power adapter minimum of 100 watts required for battery capacities greater than 56Whr and less than 83Whr. Power adapter minimum of 120 watts required for battery capacities greater than 83Whr and less than 100Whr. After charging has reached 50% capacity, charging will return to normal. Charging time may vary +/-10% due to System tolerance. Upon initial startup, it is necessary to use an minimum 45 W adapter.
54. MM25 battery life will vary depending on various factors including product model, configuration, loaded applications, features, use, wireless functionality, and power management settings. The maximum capacity of the battery will naturally decrease with time and usage. See www.bapco.com for additional details.

Technical Specifications

WEIGHTS & DIMENSIONS

Product Weight
Starting at 1.398 kg (3.08 lb) with 56 Whr battery
Weight will vary by configuration. Does not include power adapter.

Product Dimensions (w x d x h)
318.6 mm (W) x 224.4 mm (D) x 10.9 mm (front) / 17 mm (rear)
12.54 in x 8.83 in x 0.43 in (front) / 0.67 in (rear)

Pallet Dimensions (w x d x h)
12" to 15" boxes (305mm height): 1200mm x 1000mm x 1080mm [55]

55. Product packaging size varies based on options chosen. Please contact your HP representative for your packaging size details.

PORTS/SLOTS

Left side
1 HDMI 2.1 [7]
1 Super Speed USB Type-A 5Gbps signaling rate Power charging
2 Super Speed+ USB Type-C® 10Gbps signaling rate USB Power Delivery DisplayPort™ 1.4
1 Headphone/mic combo jack

Right side
1 Security lock slot (Integrated)
1 RJ45 Ethernet port
1 Super Speed USB Type-A 5Gbps signaling rate Data only
1 Nano SIM card slot (Optional)

7. HDMI cable sold separately.

Technical Specifications

SERVICE AND SUPPORT

1-year warranty and 90 day software limited warranty options depending on country. Batteries have a default one year limited warranty. Refer to http://www.hp.com/support/batterywarranty/ for additional battery information. On-site service and extended coverage is also available. HP Care Pack Services are optional extended service contracts that go beyond the standard limited warranties. To choose the right level of service for your HP product, use the HP Care Pack Services Lookup Tool at: http://www.hp.com/go/cpc. [56]

56.HP Care Packs are sold separately. Service levels and response times for HP Care Packs may vary depending on your geographic location. Service starts on date of hardware purchase. Restrictions and limitations apply. For details, visit http://www.hp.com/go/cpc. HP services are governed by the applicable HP terms and conditions of service provided or indicated to Customer at the time of purchase. Customer may have additional statutory rights according to applicable local laws, and such rights are not in any way affected by the HP terms and conditions of service or the HP Limited Warranty provided with your HP Product.

Technical Specifications

SYSTEM UNIT

Stand-Alone Power Requirements (AC Power)	
Nominal Operating Voltage	20.0V
Max Operating Power	UMA 65W
Temperature	
Operating	Operating: 0° to 35° C (32° to 95° F) No sustained direct exposure to sunlight, System performance may be reduced above 32°C (89.6°F)
Non-operating	Non-operating: -20° to 60° C (-4° to 140° F) No sustained direct exposure to sunlight, System performance may be reduced above 32°C (89.6°F)
Relative Humidity	
Operating	10% to 90%, non-condensing
Non-operating	5% to 95%, 101.6° F (38.7° C) maximum wet bulb temperature
Shock	
Operating	40 G, 2 ms, half-sine
Non-operating	240 G, 2 ms, half-sine
Random Vibration	
Operating	1.043 grams
Non-operating	3.500 grams
Altitude (unpressurized)	
Operating	-50 to 10,000 ft (-15.24 to 3,048 m)
Non-operating	-50 to 40,000 ft (-15.24 to 12,192 m)
Planned Industry Standard Certifications	
Regulatory Model Number	HSN-Q39C-4
CSA/UL 62368-1	Yes
ENERGY STAR®	Yes [57]
EPEAT®	EPEAT® Gold in the United States [58]
FCC/ICES/CISPR/VCCI	Yes
CE MARKING	Yes
GS Mark	Yes
	Related commodity should comply with ISO 9241 Standards.
China CCC/SRRC	Yes
Taiwan BSMI/NCC	Yes
Korea KCC/KC/KES	Yes
Ukraine NSoC/TEC	Yes
EAEU Compliance	Yes
Saudi Arabian Compliance	Yes
TCO	Yes
WW RoHS	Yes
Low Blue Light	Yes

57. Configurations of the HP ProBook 445 14 inch G11 Notebook PC that are ENERGY STAR® qualified are identified as HP ProBook 445 14 inch G11 Notebook PC ENERGY STAR on HP websites and on http://www.energystar.gov.

58. Based on US EPEAT® registration according to IEEE 1680.1-2018 EPEAT®. EPEAT® status varies by country. Visit http://www.epeat.net for more information.

Technical Specifications

DISPLAYS

1. Actual brightness will be lower with touchscreen or HP Sure View. CODEC H.265/HEVC (High Efficiency Video Coding) is disabled on this platform.

Note: All specifications represent the typical specifications provided by HP's component manufacturers; actual performance may vary either higher or lower.

14.0 in WUXGA (1920 x 1200) Anti-Glare UWVA LED NTSC 45 NB2X 300 eDP 1.2 w/o PSR bent LCD Panel	**Outline Dimensions (W x H x D)**	307.29 x 199.25(max)
	Active Area	301.59 x 188.50 (typ)
	Weight	300 (max)
	Diagonal Size	14
	Surface Treatment	Anti-Glare
	Touch Enabled	No
	Contrast Ratio	1000:1(typ)
	Refresh Rate	60 Hz
	Brightness	300 nits[1]
	Pixel Resolution - Format	1920 x 1200 (WUXGA)
	Backlight	WLED
	Pixel Resolution	RGB
	Color Gamut Coverage	NTSC 45%
	Color Depth	6+2 FRC
	Viewing Angle	UWVA 89/89/89/89
	Low Blue Light	No
	Power Consumption (W, EBL@ 150nits max/ 200nits max)	2.20 (max) / 2.70 (max)

14.0 in WUXGA (1920 x 1200) Anti-Glare UWVA LED NTSC 45 NB2X 300 TOP eDP 1.2 w/o PSR bent LCD Panel	**Outline Dimensions (W x H)**	307.29 x 199.25(max)
	Active Area	301.59 x 188.50 (typ)
	Weight	305g (max)
	Diagonal Size	14
	Surface Treatment	Anti-Glare
	Touch Enabled	Yes
	Contrast Ratio	1000:1(typ)
	Refresh Rate	60 Hz
	Brightness	300 nits[1]
	Pixel Resolution - Format	1920 x 1200 (WUXGA)
	Backlight	WLED
	Pixel Resolution	RGB
	Color Gamut Coverage	NTSC 45%
	Color Depth	6+2 FRC
	Viewing Angle	UWVA 89/89/89/89
	Low Blue Light	No

Technical Specifications

	Power Consumption (W, EBL@ 150nits max/ 200nits max)	2.15 (max)/2.65 (max)
14.0 in WUXGA (1920 x 1200) Anti-Glare UWVA WLED+LBL sRGB NB2X 400 eDP 1.4+PSR2 Low-Power 100 bent LCD Panel	**Outline Dimensions (W x H)**	307.590 x 199.550 (max)
	Active Area	301.590 x 188.500 (typ)
	Weight	210 (max)
	Diagonal Size	14
	Surface Treatment	Anti-Glare
	Touch Enabled	No
	Contrast Ratio	1000:1(typ)
	Refresh Rate	60 Hz
	Brightness	400 nits[1]
	Pixel Resolution - Format	1920 x 1200 (WUXGA)
	Backlight	WLED
	Pixel Resolution	RGB
	Color Gamut Coverage	sRGB 100%
	Color Depth	8
	Viewing Angle	UWVA 89/89/89/89
	Low Blue Light	Yes
	Power Consumption (W, EBL@ 150nits max/ 200nits max)	1.29 (max) / 1.66 (max)
14.0 in WQXGA DRM (2560 x 1600) Anti-Glare UWVA LED DCI-P3 NB2X 500 eDP 1.4+PSR2 100 120Hz bent LCD Panel	**Outline Dimensions (W x H)**	307.594 x 199.546 (max)
	Active Area	301.594 x 188.496 (typ)
	Weight	230 (max)
	Diagonal Size	14
	Surface Treatment	Anti-Glare
	Touch Enabled	No
	Contrast Ratio	1200:1(typ)
	Refresh Rate	120 Hz
	Brightness	500 nits[1]
	Pixel Resolution - Format	2560 x1600 (WQXGA)
	Backlight	WLED
	Pixel Resolution	RGB
	Color Gamut Coverage	DCI-P3 100%
	Color Depth	8
	Viewing Angle	UWVA 89/89/89/89
	Low Blue Light	No

Power Consumption (W, EBL@ 150nits max/ 200nits max)	2.88 (max) / 3.44 (max)

STORAGE AND DRIVES

For storage drives, GB = 1 billion bytes. TB = 1 trillion bytes. Actual formatted capacity is less. Up to 30 GB (for Windows 10 and 11) is reserved for system recovery software.

SSD 256GB 2280 PCIe NVMe Value	**Form Factor**	M.2 2280
	Capacity	256 GB
	NAND Type	TLC
	Interface	PCIe NVMe Gen4X4
	Maximum Sequential Read	2000 MB/s ±20%
	Maximum Sequential Write	900 MB/s ±20%
	Logical Blocks	500,118,192
	Features	Pyrite 2.0; TRIM; L1.2
SSD 512GB 2280 PCIe NVMe Value	**Form Factor**	M.2 2280
	Capacity	512 GB
	NAND Type	TLC
	Interface	PCIe NVMe Gen4X4
	Maximum Sequential Read	2200 MB/s ±20%
	Maximum Sequential Write	1000 MB/s ±20%
	Logical Blocks	1,000,215,215
	Features	Pyrite 2.0; TRIM; L1.2
SSD 1TB 2280 PCIe NVMe Value	**Form Factor**	M.2 2280
	Capacity	1TB
	NAND Type	TLC
	Interface	PCIe NVMe Gen4X4
	Maximum Sequential Read	2200 MB/s ±20%
	Maximum Sequential Write	1600 MB/s ±20%
	Logical Blocks	2,000,409,264
	Features	Pyrite 2.0; TRIM; L1.2
SSD 256GB 2230 PCIe NVMe Value	**Form Factor**	M.2 2230
	Capacity	256 GB
	NAND Type	TLC
	Interface	PCIe NVMe Gen4X4
	Maximum Sequential Read	2000 MB/s ±20%
	Maximum Sequential Write	900 MB/s ±20%

Technical Specifications

Logical Blocks	500,118,192
Features	Pyrite 2.0; TRIM; L1.2

NETWORKING/COMMUNICATIONS

Realtek RTL8852CE 802.11ax 2x2 Wi-Fi 6E Bluetooth® 5.3 Wireless Card (802.11ax 2x2, supporting gigabit data rate)[1]	**Wireless LAN Standards**	IEEE 802.11a IEEE 802.11ac IEEE 802.11ax IEEE 802.11b IEEE 802.11d IEEE 802.11e IEEE 802.11g IEEE 802.11h IEEE 802.11i IEEE 802.11k IEEE 802.11n
	Interoperability	Wi-Fi certified
	Frequency Band	• 802.11b/g/n/ax 2.402 – 2.482 GHz • 802.11a/n/ac/ax 5.15 – 5.25 GHz 5.25 – 5.35 GHz 5.47 – 5.725 GHz 5.825 – 5.850 GHz 5.955 – 6.415 GHz 6.435 – 6.515 GHz 6.535 – 6.875 GHz 6.895 – 7.115 GHz
	Data Rates	• 802.11a: 6, 9, 12, 18, 24, 36, 48, 54 Mbps • 802.11ac : MCS0 ~ MCS9, (20MHz, 40MHz, 80MHz, 160MHz) • 802.11ax : MCS0 ~ MCS11, (20MHz, 40MHz, 80MHz, 160MHz) • 802.11b: 1, 2, 5.5, 11 Mbps • 802.11g: 6, 9, 12, 18, 24, 36, 48, 54 Mbps • 802.11n: MCS 0 ~ MCS 15, (20MHz, 40MHz)
	Modulation	Direct Sequence Spread Spectrum 1024QAM, 16-QAM, 256-QAM, 64-QAM, BPSK, CCK, Direct Sequence Spread Spectrum, OFDM, QPSK
	Security[2]	• 802.1x authentication • AES-CCMP: 128 bit in hardware • IEEE 802.11i • IEEE and WiFi certified 64 / 128 bit WEP encryption for a/b/g mode only • WAPI • WPA, WPA2: 802.1x. WPA-PSK, WPA2-PSK, TKIP, and AES. • WPA2 certification • WPA3 (personal) certification
	Network Architecture Models	Ad-hoc (Peer to Peer) Infrastructure (Access Point Required)

Technical Specifications

Roaming	IEEE 802.11 compliant roaming between access points
Output Power[3]	• 802.11b : +17dBm minimum • 802.11g : +16dBm minimum • 802.11a : +17dBm minimum • 802.11n HT20(2.4GHz) : +14dBm minimum • 802.11n HT40(2.4GHz) : +13dBm minimum • 802.11n HT20(5GHz) : +14dBm minimum • 802.11n HT40(5GHz) : +13dBm minimum • 802.11ac VHT80(5GHz) : +10dBm minimum • 802.11ac VHT160(5GHz) : +10dBm minimum • 802.11ax HE40(2.4GHz) : +12dBm minimum • 802.11ax HE80(5GHz) : +10dBm minimum • 802.11ax HE160(5GHz) : +10dBm minimum • 802.11ax HE80(6GHz) : +10dBm minimum • 802.11ax HE160(6GHz) : +10dBm minimum
Power Consumption	Transmit mode : 2.5 W Receive mode : 2.0 W Idle mode (PSP) : 180 mW (WLAN Associated) Idle mode: 50 mW (WLAN unassociated) Connected Standby/Modern Standby : 10 mW Radio disabled : 8 mW
Power Management	ACPI and PCI Express compliant power management
Receiver Sensitivity[4]	• 802.11b, 1Mbps : -93.5dBm maximum • 802.11b, 11Mbps : -84dBm maximum • 802.11a/g, 6Mbps : -86dBm maximum • 802.11a/g, 54Mbps : -72dBm maximum • 802.11n, MCS07 : -67dBm maximum • 802.11n, MCS15 : -64dBm maximum • 802.11ac, MCS0(VHT80) : -84dBm maximum • 802.11ac, MCS9(VHT80) : -59dBm maximum • 802.11ac, MCS9(VHT160) : -58.5dBm maximum • 802.11ax, MCS11(HE40): -57dBm maximum • 802.11ax, MCS11(HE80): -54dBm maximum • 802.11ax, MCS11(HE160): -53.5dBm maximum
Antenna type	High efficiency antenna with spatial diversity Two embedded tri-band 2.4/5/6 GHz antennas are provided to the card to support WLAN MIMO communications and Bluetooth® communications
Form Factor	PCI-Express M.2 MiniCard
Dimensions	30.00 x 22.00 x 2.30 mm (1.18 x 0.87 x 0.09 inch)
Weight	Type 2230: 2.8 g
Operating Voltage	3.3 v +/- 5 %
LED Activity	N/A

HP Integrated Module with Bluetooth® 4.0/4.1/4.2/5.0/5.1/5.2/5.3 Wireless Card Technology

Bluetooth® Specification	4.0/4.1/4.2/5.0/5.1/5.2/5.3 Compliant
Frequency Band	2402 to 2480 MHz

Technical Specifications

Number of Available Channels	Legacy : 0~79 (1 MHz/CH) BLE : 0~39 (2 MHz/CH)
Signaling Data Rate	Legacy : 3 Mbps data rate; throughput up to 2.17 Mbps BLE : 1 Mbps data rate; throughput up to 0.2 Mbps Legacy : Synchronous Connection Oriented links up to 3, 64 kbps, voice channels Legacy : Asynchronous Connection Less links 2178.1 kbps/177.1 kbps asymmetric (3-DH5) or 864 kbps symmetric (3-EV5)
Transmit Power	The Bluetooth® component shall operate as a Class II Bluetooth® device with a maximum transmit power of + 4 dBm for BR and EDR.
Power Consumption	Peak (Tx): 330 mW Peak (Rx): 230 mW Selective Suspend: 17 mW
Bluetooth® Software Supported	Microsoft Windows Bluetooth® Software
Link Topology	
Power Management	Microsoft Windows ACPI, and USB Bus Support
Certifications	FCC (47 CFR) Part 15C/E, Section 15.247, 15.249, 15.407; ETSI 300 328, ETSI 301 893, ETSI 303 687
Power Management	2Mbps LE
Certifications	Advanced Audio Distribution Profile (A2DP) Bluetooth® 4.1-ESR 5/6/7 Compliance Bluetooth® 4.2 ESR08 Compliance Bluetooth® 5.2 Bluetooth® 5.3 wireless card Channel Selection Algo Encryption key size control enhancements ESR9/10 Compliance Hands Free Profile (HFP) LE Advertisement Extensions LE Data Packet Length Extension LE Dual Mode LE L2CAP Connection Oriented Channels LE Link Layer LE Link Layer Ping LE Long Range LE Low Duty Cycle Directed Advertising LE Privacy 1.2 –Extended Scanner Filter Policies LE Privacy 1.2 –Link Layer Privacy LE Secure Connection- Basic/Full Limited High Duty Cycle Non-Connectable Advertising Periodic Advertisement interval Train Nudging & Interlaced Scan Windows Bluetooth® profiles support
Bluetooth® Profiles Supported	Peak (Tx): 330 mW Peak (Rx): 230 mW Selective Suspend: 17 mW

Technical Specifications

1. Wi-Fi 6E requires a Wi-Fi 6E router, sold separately, to function in the 6GHz band. Availability of public wireless access points limited. Wi-Fi 6E is backwards compatible with prior 802.11 specs. And available in countries where Wi-Fi 6E is supported. Wi-Fi 6E is designed to support gigabit data rate when transferring files between two devices connected to the same router. Requires a wireless router, sold separately, that supports 80MHz and higher channels.
2. Check latest software/driver release for updates on supported security features.
3. The FCC has declared as of September 1, 2014 products that utilize passive scanning on channel 12/13 and are capable of transmitting must fully comply with requirements of 15.247 or otherwise disable those channels.
4. Receiver sensitivity is measured at a packet error rate of 8% for 802.11b (CKK modulation) and a packet error rate of 10% for 802.11a/g (OFDM modulation).

MediaTek RZ616 Wi-Fi 6E Bluetooth®5.3 Wireless Card (802.11ax 2x2, AMD AIM-T) [1]	**Wireless LAN Standards**	IEEE 802.11a IEEE 802.11ac IEEE 802.11ax IEEE 802.11b IEEE 802.11d IEEE 802.11e IEEE 802.11g IEEE 802.11h IEEE 802.11i IEEE 802.11j IEEE 802.11k IEEE 802.11mc IEEE 802.11n IEEE 802.11r IEEE 802.11v IEEE 802.11w
	Interoperability	Wi-Fi certified
	Frequency Band	• 802.11b/g/n/ax 2.402 – 2.482 GHz • 802.11a/n/ac/ax 5.15 – 5.25 GHz 5.25 – 5.35 GHz 5.47 – 5.725 GHz 5.825 – 5.850 GHz 5.925 – 7.125 GHz
	Data Rates	• 802.11a: 6, 9, 12, 18, 24, 36, 48, 54 Mbps • 802.11ac : MCS0 ~ MCS9, (20MHz, 40MHz, 80MHz, 160MHz) • 802.11ax : MCS0 ~ MCS11, (20MHz, 40MHz, 80MHz, 160MHz) • 802.11b: 1, 2, 5.5, 11 Mbps • 802.11g: 6, 9, 12, 18, 24, 36, 48, 54 Mbps • 802.11n: MCS 0 ~ MCS 15, (20MHz, 40MHz)
	Modulation	Direct Sequence Spread Spectrum 1024QAM, 16-QAM, 256-QAM, 64-QAM, BPSK, CCK, Direct Sequence Spread Spectrum, OFDM, QPSK
	Security[2]	• 802.1x authentication

Technical Specifications

	• AES-CCMP: 128 bit in hardware • IEEE 802.11i • IEEE and WiFi certified 64 / 128 bit WEP encryption for a/b/g mode only WAPI • WPA, WPA2: 802.1x. WPA-PSK, WPA2-PSK, TKIP, and AES. • WPA2 certification • WPA3 (personal) certification
Network Architecture	Ad-hoc (Peer to Peer)
Models	Infrastructure (Access Point Required)
Roaming	IEEE 802.11 compliant roaming between access points
Output Power[3]	2.4GHz (MIMO, typical): • 802.11b : +18dBm • 802.11g : +16.5dBm • 802.11n/ac/ax (HT20/VHT20/HE20) : +16dBm • 802.11n/ac/ax (HT40/VHT40/HE40) : +12.5dBm 5GHz (MIMO, typical): • 802.11a : +13dBm • 802.11n/ac/ax (HT20/VHT20/HE20) : +13.5dBm • 802.11n/ac/ax (HT40/VHT40/HE40) : +12.5dBm • 802.11ac/ax (VHT80/HE80) : +11.5dBm • 802.11ax HE160 : +11.5dBm 6GHz LPI mode (MIMO, typical):: • 802.11a : 0dBm • 802.11ax HE20 : +1dBm • 802.11ax HE40 : +4dBm • 802.11ax HE80 : +7dBm • 802.11ax HE160 : +7.5dBm
Power Consumption	Transmit mode : 2.5 W Receive mode : 2.0 W Idle mode (PSP) : 180 mW (WLAN Associated) Idle mode: 50 mW (WLAN unassociated) Connected Standby/Modern Standby : 10 mW Radio disabled : 8 Mw
Power Management	ACPI and PCI Express compliant power management
Receiver Sensitivity[4]	2.4GHz (SISO): •802.11b, 11Mbps : -82dBm maximum • 802.11g, 54Mbps : -71dBm maximum • 802.11n, MCS7 : -64dBm maximum • 802.11ac, MCS9 : -52dBm maximum •802.11ax, MCS11(HT40): -49dBm maximum 5GHz (SISO): • 802.11a, 54Mbps : -71dBm maximum • 802.11n, MCS07 : -64dBm maximum • 802.11ac, MCS9 : -52dBm maximum •802.11ax, MCS11(HE80/HE160): -46dBm maximum

Technical Specifications

	6GHz (SISO): • 802.11a, 54Mbps : -71dBm maximum • 802.11n, MCS7 : -64dBm maximum • 802.11ac, MCS9 : -52dBm maximum •802.11ax, MCS11(HE160): -46dBm maximum
Antenna type	High efficiency antenna with spatial diversity, mounted in the display enclosure Two embedded dual band 2.4/5/6 GHz antennas are provided to the card to support WLAN MIMO communications and Bluetooth® communications
Form Factor	PCI-Express M.2 MiniCard
Dimensions	30.00 x 22.00 x 2.30 mm (1.18 x 0.87 x 0.09 inch)
Weight	Type 2230: 2.8 g
Operating Voltage	3.3 v +/- 9 %
LED Activity	N/A

HP Integrated Module with Bluetooth® 4.0/4.1/4.2/5.0/5.1/5.2/5.3 Wireless Card Technology

Bluetooth® Specification	4.0/4.1/4.2/5.0/5.1/5.2/5.3 Compliant
Frequency Band	2402 to 2480 MHz
Number of Available Channels	Legacy : 0~79 (1 MHz/CH) BLE : 0~39 (2 MHz/CH)
Signaling Data Rate	Legacy : 3 Mbps data rate; throughput up to 2.17 Mbps BLE : 1 Mbps data rate; throughput up to 0.2 Mbps Legacy : Synchronous Connection Oriented links up to 3, 64 kbps, voice channels Legacy : Asynchronous Connection Less links 2178.1 kbps/177.1 kbps asymmetric (3-DH5) or 864 kbps symmetric (3-EV5)
Transmit Power	The Bluetooth® component shall operate as a Class II Bluetooth® device with a maximum transmit power of + 4 dBm for BR and EDR.
Power Consumption	Peak (Tx): 330 mW Peak (Rx): 230 mW Selective Suspend: 17 mW
Bluetooth® Software Supported Link Topology	Microsoft Windows Bluetooth® Software
Power Management	Microsoft Windows ACPI, and USB Bus Support
Certifications	FCC (47 CFR) Part 15C/E, Section 15.247, 15.249, 15.407; ETSI 300 328, ETSI 301 893, ETSI 303 687
Power Management Certifications	2Mbps LE Advanced Audio Distribution Profile (A2DP) Basic Imaging Profile (BIP) Bluetooth® 4.1-ESR 5/6/7 Compliance Bluetooth® 4.2 ESR08 Compliance Bluetooth® 5.2 Bluetooth® 5.3 wireless card Channel Selection Algo Encryption key size control enhancements ESR9/10 Compliance FAX Profile (FAX)

Technical Specifications

	Hands Free Profile (HFP) Headset Profile (HSP) LE Advertisement Extensions LE Data Packet Length Extension LE Dual Mode LE L2CAP Connection Oriented Channels LE Link Layer LE Link Layer Ping LE Long Range LE Low Duty Cycle Directed Advertising LE Privacy 1.2 –Extended Scanner Filter Policies LE Privacy 1.2 –Link Layer Privacy LE Secure Connection- Basic/Full Limited High Duty Cycle Non-Connectable Advertising Periodic Advertisement interval Train Nudging & Interlaced Scan Windows Bluetooth® profiles support
Bluetooth® Software Supported	4.0/4.1/4.2/5.0/5.1/5.2/5.3 Compliant

1. Wi-Fi 6E requires a Wi-Fi 6E router, sold separately, to function in the 6GHz band. Availability of public wireless access points limited. Wi-Fi 6E is backwards compatible with prior 802.11 specs. And available in countries where Wi-Fi 6E is supported. Wi-Fi 6E is designed to support gigabit data rate when transferring files between two devices connected to the same router. Requires a wireless router, sold separately, that supports 80MHz and higher channels.
2. Check latest software/driver release for updates on supported security features.
3. The FCC has declared as of September 1, 2014 products that utilize passive scanning on channel 12/13 and are capable of transmitting must fully comply with requirements of 15.247 or otherwise disable those channels.
4. Receiver sensitivity is measured at a packet error rate of 8% for 802.11b (CKK modulation) and a packet error rate of 10% for 802.11a/g (OFDM modulation).

Technical Specifications

HP 4G LTE-A Pro Cat16 WWAN eSIM [1]	**Technology/Operating bands**	WCDMA/HSPA+ operating bands: Band 1: 1920 to 1980 MHz (UL), 2110 to 2170 MHz (DL) Band 2: 1850 to 1910 MHz (UL), 1930 to 1990 MHz (DL) Band 4: 1710 to 1755 MHz (UL), 2110 to 2155 MHz (DL) Band 5: 824 to 849 MHz (UL), 869 to 894 MHz (DL) Band 8: 880 to 915 MHz (UL), 925 to 960 MHz (DL) LTE FDD/TDD operating bands: Band 1: 1920 to 1980 MHz (UL), 2110 to 2170 MHz (DL) Band 12: 699 to 716 MHz (UL), 729 to 746 MHz (DL) Band 13: 777 to 787 MHz (UL), 746 to 756 MHz (DL) Band 14: 788 to 798 MHz (UL), 758 to 768 MHz (DL) Band 17: 704 to 716 MHz (UL), 734 to 746 MHz (DL) Band 18: 815 to 830 MHz (UL), 860 to 875 MHz (DL) Band 19: 830 to 845 MHz (UL), 875 to 890 MHz (DL) Band 2: 1850 to 1910 MHz (UL), 1930 to 1990 MHz (DL) Band 20: 832 to 862 MHz (UL), 791 to 821 MHz (DL) Band 25: 1850 to 1915 MHz (UL), 1930 to 1995 MHz (DL) Band 26: 814 to 849 MHz (UL), 859 to 894 MHz (DL) Band 28: 703 to 748 MHz (UL), 758 to 803 MHz (DL) Band 29: 717 to 728 MHz (DL) Band 3: 1710 to 1785 MHz (UL), 1805 to 1880 MHz (DL) Band 30: 2305 to 2315 MHz (UL) 2350 to 2360 MHz (DL) Band 32: 1452 to 1496 MHz (DL) Band 34: 2010 to 2025 MHz (UL/DL) Band 38: 2570 to 2620 MHz (UL/DL) Band 39: 1880 to 1920 MHz (UL/DL) Band 4: 1710 to 1755 MHz (UL), 2110 to 2155 MHz (DL) Band 40: 2300 to 2400 MHz (UL/DL) Band 41: 2496 to 2690 MHz (UL/DL) Band 42: 3400 to 3600 MHz (UL/DL) Band 43: 3400 to 3800 MHz (UL/DL) Band 48: 3550 to 3700 MHz (UL/DL) Band 5: 824 to 849 MHz (UL), 869 to 894 MHz (DL) Band 66: 1710 to 1800 MHz (UL), 2110 to 2200 MHz (DL) Band 7: 2500 to 2570 MHz (UL), 2620 to 2690 MHz (DL) Band 71: 663 to 698 MHz (UL), 617 to 652 MHz (DL) Band 8: 880 to 915 MHz (UL), 925 to 960 MHz (DL)
	Wireless protocol standards	3GPP LTE Rel15 LTE Specification, 100MHz 5 DLCA, 256 QAM, DL 1.0Gbps (CAT16)/ 40MHz 2 ULCA, 256 QAM, UL 211Mbps (CAT18) WCDMA 3GPP Release 8 UMTS Specification, DL UMTS: 384 kbps/UL 384 kbp, DL DC-HSPA+: 42 Mbps (CAT24)/UL 11.5 Mbps (CAT7) WCDMA R99, 3GPP Release 5, 6, 7 and 8 UMTS Specification
	GPS	Standalone/A-GPS (MS-A, MS-B)
	GPS bands	GPS L1 (1575.42MHz), GLONASS L1 (1602MHz), Beidou B1 (1561.098MHz), Galileo E1 (1575.42MHz), QZSS (1575.42MHz)
	Maximum data rates	DC-HSPA+: 42.00 Mbps(Download), 11.50 Mbps(Upload)

Technical Specifications

Maximum output power	HSPA+: 23.5 dBm LTE (all bands except B41): 23.0 dBm
Maximum power consumption	LTE: 1,300 mA (peak); 1,100 mA (average) HSPA+: 1,100 mA (peak); 800 mA (average)
Form Factor	M.2; 3052-S3 Key B
Weight	8.0 g (0.282 oz)
Dimensions (Length x Width x Thickness)	52.00 x 30.00 x 2.30 mm (2.05 x 1.18 x 0.09 inch)
eSIM	Yes

1. Mobile Broadband is an optional feature. Connection requires wireless data service contract, network support, and is not available in all areas. Contact service provider to determine the coverage area and availability. Connection speeds will vary due to location, environment, network conditions, and other factors. 4G LTE not available on all products or in all countries.

Realtek RTL8111HSH 10/100/1000 Integrated NIC	**Connector**	RJ-45
	System Interface	PCIe + SMBus
	Data rates supported	10 Mbit/s operation (10BASE-T; IEEE 802.3i; IEEE 802.3 clauses 13-14) 100 Mbit/s operation (100BASE-TX; IEEE 802.3u; IEEE 802.3 clauses 21-30) 1000 Mbit/s operation (1000BASE-T; IEEE 802.3ab; IEEE 8023 clauses 40) Auto-Negotiation (Automatic Speed Selection) Full Duplex Operation at all Speeds, Half Duplex operation at 10 and 100 Mbit/s
	IEEE Compliance	IEEE 802.1p QoS (Quality of Service) Support IEEE 802.1q VLAN support IEEE 802.3x Flow Control (IEEE 802.3 clauses 31-32; configurable) IEEE 802.3az EEE (Energy Efficient Ethernet)
	Performance	TCP/IP/UDP Checksum Offload (configurable) Protocol Offload (ARP & NS) Large send offload and Giant send offload Receiving Side Scaling Jumbo Frame 9K
	Power consumption	Cable Disconnetion: 25mW 100Mbps Full Run: 450mW 1000bp Full Run: 1000mW WoL Enable(S3/S4/S5): 50mW WoL Disable(S3/S4/S5): 25mW
	Power Management	ACPI compliant – multiple power modes Situation-sensitive features reduce power consumption Advanced link down power saving for reducing link down power consumption
	Management Interface	Auto MDI/MDIX Crossover cable detection

Technical Specifications

POWER

1. Actual battery Watt-hours (Wh) will vary from design capacity. Battery capacity will naturally decrease with shelf life, time, usage, environment, temperature, system configuration, loaded apps, features, power management settings and other factors

AC Adapter 45 Watt nPFC Standard USB type C Straight 1.8m	**Weight**	180g(+/-10g)	
	Input	100~240VAC	
		Input Efficiency	81.50% min at 115 Vac/ 230 Vac @5.00V 86.70% min at 115 Vac/ 230 Vac @9.00V 87.40% min at 115 Vac/ 230 Vac @12.00V 87.80% min at 115 Vac/ 230 Vac @15.00V
		Input frequency range	47 ~ 63Hz
		Input AC current	Max. 1.4 A at 90 Vac
	Output	**Output power**	5V/15W 9V/27W 12V/36W 15V/45W
		DC output	5V/9V/12V/15V
		Hold-up time	100% load 5ms at 115 Vac input
		Output current limit	<5.0A
		AC Inlet Type	C6
		DC Cable Connector	USB Type-C
		DC Cable Material	PVC
	Connector	C6	
	Environmental Design	**Operating temperature**	32oF to 95oF (0oto 35oC)
		Non-operating (storage) temperature	-4oF to 185oF (-20oto 85oC)
		Altitude	0 to 16,400 ft (0 to 5000m)
		Humidity	20% to 95%
		Storage Humidity	10% to 95%
	EMI and Safety Certifications	CE Mark - full compliance with LVD and EMC directives Worldwide safety standards - IEC60950-1 and IEC62368-1 : 2018, EN62368-1:2014+A11, UL62368-1 Agency approvals - C-UL-US, TUV/GS, TUV/PSE, EN55032 Class B, FCC Class B, CISPR32 Class B, CCC and CECP, CU(EAC), EAEU, KCC(Safety+EMC) and K-MEPS, NOM-001 and 029 NYCE, NRcan, NRCS, ISC, SEC, PSB, Argentina S-mark, Australia RCM, BIS, BSMI, UAE, UKCA DoC, USB-IF, Ukraine(CoC+DoC+RoHS+ECO)	

Technical Specifications

AC Adapter 65 Watt nPFC Standard USB type C Straight 1.8m	**Weight**	240g ± 10g	
	Input	100-240Vac	
		Input Efficiency	81.50% min at 115 Vac/ 230 Vac @5.00V 86.70% min at 115 Vac/ 230 Vac @9.00V 88.00% min at 115 Vac/ 230 Vac @12.00V 89.00% min at 115 Vac/ 230 Vac @15.00V 89.00% min at 115 Vac/ 230 Vac @20.00V
		Input frequency range	47-63Hz
		Input AC current	Max. 1.6 A at 90 Vac
	Output	**Output power**	5V/15W 9V/27W 12V/60W 15V/65W 20V/65W
		DC output	5V/9V/12V/15V/20V
		Hold-up time	100% load 5ms at 115 Vac input
		Output current limit	< 8.0A
		AC Inlet Type	C6
		DC Cable Connector	USB type C
		DC Cable Material	PVC
	Connector	C6	
	Environmental Design	**Operating temperature**	32oF to 95oF (0oto 35oC)
		Non-operating (storage) temperature	-4oF to 185oF (-20oto 85oC)
		Altitude	0 to 16,400 ft (0 to 5000m)
		Humidity	20% to 95%
		Storage Humidity	10% to 95%
	EMI and Safety Certifications	CE Mark - full compliance with LVD and EMC directives Worldwide safety standards - IEC60950-1 and IEC62368-1 : 2018, EN62368-1:2014+A11, UL 62368-1 Agency approvals - C-UL-US, TUV/GS, TUV/PSE, EN55032 Class B, FCC Class B, CISPR32 Class B, CCC and CECP, CU(EAC), EAEU, KCC(Safety+EMC) and K-MEPS, NOM-001 and 029 NYCE, NRcan, NRCS, ISC, SEC, PSB, Argentina S-mark, Australia RCM, BIS, BSMI, UAE, UKCA DoC	

Technical Specifications

HP 65W Standard USB-C Straight AC Power Adapter Ceto HF	**Weight**	240g ± 10g	
	Input	100-240Vac	
		Input Efficiency	81.50% min at 115 Vac/ 230 Vac @5.00V 86.70% min at 115 Vac/ 230 Vac @9.00V 88.00% min at 115 Vac/ 230 Vac @12.00V 89.00% min at 115 Vac/ 230 Vac @15.00V 89.00% min at 115 Vac/ 230 Vac @20.00V
		Input frequency range	47-63Hz
		Input AC current	Max. 1.6 A at 90 Vac
	Output	**Output power**	5V/15W 9V/27W 12V/60W 15V/65W 20V/65W
		DC output	5V/9V/12V/15V/20V
		Hold-up time	100% load 5ms at 115 Vac input
		Output current limit	< 8.0A
		AC Inlet Type	C6
		DC Cable Connector	USB type C
		DC Cable Material	Halogen Free
	Connector	C6	
	Environmental Design	**Operating temperature**	32oF to 95oF (0oto 35oC)
		Non-operating (storage) temperature	-4oF to 185oF (-20oto 85oC)
		Altitude	0 to 16,400 ft (0 to 5000m)
		Humidity	20% to 95%
		Storage Humidity	10% to 95%
	EMI and Safety Certifications	CE Mark - full compliance with LVD and EMC directives Worldwide safety standards - IEC60950-1 and IEC62368-1 : 2018, EN62368-1:2014+A11, UL 62368-1 Agency approvals - C-UL-US, TUV/GS, TUV/PSE, EN55032 Class B, FCC Class B, CISPR32 Class B, CCC and CECP, CU(EAC), EAEU, KCC(Safety+EMC) and K-MEPS, NOM-001 and 029 NYCE, NRcan, NRCS, ISC, SEC, PSB, Argentina S-mark, Australia RCM, BIS, BSMI, UAE, UKCA DoC	

Technical Specifications

RX 48Whr Long Life Polymer Fast Charge 3 cell Battery	**Weight**	0.192kg +/- 10g (0.423 lb)	
	Cells/Type	3cell Lithium-Ion Polymer cell / NCM 565875	
	Energy	**Voltage**	11.4V
		Amp-hour capacity	4.285Ah
		Watt-hour capacity[1]	48.84Wh
	Temperature	**Operating (Charging)**	32˚ to 113˚ F (0˚ to 45˚ C) (Charge Initial Temperature) 32˚ to 122˚ F (0˚ to 50˚ C) (Continuous Charging)
		Operating (Discharging)	14˚ to 140˚ F (-10˚ to 60˚ C)
		Optional Travel Battery Available	No

RX 56Whr Long Life Polymer Fast Charge 3 cell Battery	**Weight**	0.208kg +/- 10g (0.459 lb)	
	Cells/Type	3cell Lithium-Ion Polymer cell / 586075	
	Energy	**Voltage**	11.58V
		Amp-hour capacity	4.840Ah
		Watt-hour capacity[1]	56.04Wh
	Temperature	**Operating (Charging)**	32˚ to 113˚ F (0˚ to 45˚ C) (Charge Initial Temperature) 32˚ to 122˚ F (0˚ to 50˚ C) (Continuous Charging)
		Operating (Discharging)	14˚ to 140˚ F (-10˚ to 60˚ C)
		Optional Travel Battery Available	No

Technical Specifications

AUDIO

Codec	ALC3247
Audio I/O Ports	3.5mm Headset: CTIA only; Headphone-out
Multi-streaming Capable	Playback multi-streaming can be enabled in the audio control panel to allow independent audio streams to be sent to/from the front jacks or integrated speaker. Following MSFT Behavior
Sampling	DAC: Supports resolutions from 16-bit to 16-bit;48.0 kHZ to 48.0 kHz ADC: Supports resolutions from 16-bit to 16-bit;48.0 kHZ to 48.0 kHz
Wavetable Syntheses	Yes - Uses OS soft wavetable
Internal Speaker	Yes

FINGERPRINT READER

Sensor vendor	ELAN
Sensor type	Capacitive
DPI resolution	508 DPI
Scan area	80 x 80 pixels
False Rejection Rate	< 3%
False Acceptance Rate	< 0.001%
Mobile Voltage Operation	2.7 V ~ 3.6 V
Operating Temperature	-20°C ~ 80°C (-4°F ~ 176°F)
Current Consumption Image	35 mA max
Low Latency Wait For Finger	300 uA
Capture Rate	50 frames/sec
ESD Resistance	IEC 61000-4-2 4B (+15KV)
Detection Matrix	508 dpi / 4.0 x 4.0 mm sensor area

Sensor vendor	SYNAPTICS
Sensor type	Capacitive
DPI resolution	363 DPI
Scan area	104 x 86 pixels
False Rejection Rate	< 3%
False Acceptance Rate	< 0.001%
Mobile Voltage Operation	2.7 V ~ 3.6 V
Operating Temperature	0°C ~ 60°C (32°F ~ 140°F)
Current Consumption Image	100 mA max
Low Latency Wait For Finger	260 uA
Capture Rate	50 frames/sec
ESD Resistance	IEC 61000-4-2 4B (+15KV)
Detection Matrix	363 dpi / 7.4 x 6.0 mm sensor area

Options and Accessories (Sold separately and availability may vary by country)

DOCKING (Sold Separately)

Docking station model #1	HP USB-C Dock G5
Total number of supported displays (incl. the notebook display)	3
Max. resolutions supported	Multi-Function Mode: (2) 5k @ 30Hz and (1) 4k UHD @ 30Hz on any port. High-Resolution Mode: (2) 5k @ 60Hz on DisplayPort ports and (1) 4k UHD @ 60Hz on HDMI port.
Dock Connectors	
Technical limitations	Maximum resolution and display support is dependent on the maximum capability of the notebook. Highest resolution with dual displays is two 8K@ 60Hz host in High Resolution mode. Three maximum displays supported are two 5K@ 30 Hz on DP ports plus one 4K UHD@ 30 Hz on HDMI in Multi-function mode. The highest resolution for a non-Thunderbolt host in Multi-function mode is a single 5K dual cable (using both DP ports) + (1) 4K on HDMI port.
Docking station model #2	HP Thunderbolt™ 120W G4 Dock
Total number of supported displays (incl. the notebook display)	4
Max. resolutions supported	Quad 4K @60Hz. Dual 8K single cable@30 for Thunderbolt hosts or USB-C hosts DisplayPort 1.4 with Display Stream Compression in High-Resolution Mode.
Dock Connectors	2 x HDMI 2.0, 1 x USB-C Alt Mode, 1 x Thunderbolt 4, 2 x DisplayPort 1.4
Technical limitations	Maximum resolution and display support is dependent on the maximum capability of the notebook. Thunderbolt Hosts: Maximum of (4) displays with maximum resolution of 5K@ 30Hz running Thunderbolt host. Maximum resolution possible is dual 8K displays @ 60Hz running Thunderbolt host or running a non-Thunderbolt host in high resolution mode @30Hz. Non-Thunderbolt hosts: The highest resolution for dual displays running a non-Thunderbolt host in multi-function mode is (1) 5K dual cable (using both DP ports) +(1) 4K on USB-C DP port. Non-Thunderbolt hosts support (3) displays with a maximum resolution of (2) 5K single cable + (1) 4K UHD @ 60 Hz in high resolution mode. In multi-function mode the maximum resolution for (3) displays is (2) 5K single cable @ 30Hz + (1) 4K UHD @ 30Hz.

Options and Accessories (Sold separately and availability may vary by country)

Type	Description	Part Number
Adapter	HP HDMI to VGA Adapter	H4F02AA
	HP USB 3.0 to Gigabit RJ45 Adapter G2	4Z7Z7AA
	HP USB-C to DisplayPort Adapter	6M148AA
	HP USB-C to DisplayPort Adapter G2	8Y8Y1AA, 8Y8Y2AA
	HP USB-C to HDMI 2.0 Adapter	1WC36AA
	HP USB-C to RJ45 Adapter G2	4Z527AA
	HP USB-C to USB 3.0 Adapter	N2Z63AA
	HP USB-C to VGA Adapter	N9K76AA
Cases	HP 115 15.6 Laptop Backpack	8DV45AA
	HP 215 15.6 Laptop Backpack	35L98AA
	HP 225 15.6 Laptop Backpack	2P7U6AA
	HP 235 15.6 Laptop Backpack	35M00AA
	HP 315 15.6 Laptop Backpack	35L97AA
	HP Campus blue Backpack	7K0E5AA
	HP Campus green Backpack	7K0E4AA
	HP Campus XL Marble Stone Backpack	7K0E2AA
	HP Campus XL Tie Dye Backpack	7K0E3AA
	HP Prelude 15.6 Backpack	1E7D6AA, 5OP32AA
	HP Prelude 15.6 Backpack (Bulk Qty.15)	1E7D6A6
	HP Prelude 15.6 Top Load	1E7D7AA, 5OP31AA
	HP Prelude 15.6 Top Load (Bulk Qty.20)	1E7D7A6
	HP Prelude Pro Recycled 15.6 Backpack	1X644AA
	HP Prelude Pro Recycled 15.6 Backpack (Bulk Qty.12)	1X644A6
	HP Prelude Pro Recycled 15.6 Top Load	1X645AA
	HP Prelude Pro Recycled 15.6 Top Load (Bulk Qty.12)	1X645A6
	HP Renew Business 14.1 Laptop Bag	3E5F9AA
	HP Renew Business 14.1 Laptop Bag (Bulk Qty.12)	3E5F9A6
	HP Renew Business 14.1 Laptop Sleeve	3E2U7AA
	HP Renew Business 14.1 Sleeve (Bulk Qty. 24)	3E2U7A6
	HP Renew Business 15.6 Laptop Bag	3E5F8AA
	HP Renew Business 15.6 Laptop Bag (Bulk Qty.12)	3E5F8A6
	HP Renew Business 17.3 Laptop Backpack	3E2U5AA
	HP Renew Business 17.3 Laptop Backpack (Bulk Qty. 6)	3E2U5A6
	HP Renew Business 17.3 Laptop Bag	3E2U6AA
	HP Renew Executive 14.1 Laptop Sleeve	6B8Y3AA
	HP Renew Executive 16 Laptop Backpack	6B8Y1AA
	HP Renew Executive 16 Laptop Bag	6B8Y2AA
	HP Travel 25 Liter 15.6 Iron Gray Laptop Backpack	6H2D8AA
	HP Travel 18 Liter 15.6 Iron Gray Laptop Backpack	6H2D9AA
Commodity	HP USB DVD-Writer External ODD	F2B56AA
	HP Combination Nano Cable Lock	63B28AA

Options and Accessories (Sold separately and availability may vary by country)

	HP Essential Combination Nano Cable Lock	63B31AA
	HP Nano Keyed Cable Lock	1AJ39AA
	HP Nano Master Keyed Cable Lock	1AJ40AA
	HP SureKey Standard/Nano/Wedge Cable Lock	6UW42AA
Docking	HP Thunderbolt™ 120W G4 Dock	4J0A2AA
	HP USB-C™ 120W G5 Dock	5TW10AA
Hub	HP USB-C™ G2 Travel Dock	7PJ38AA
	HP 4K USB-C Multiport Hub	6G843AA
	HP Universal USB-C Hub and Laptop Charger Combo	9H0H9AA
	HP Universal USB-C Multiport Hub	50H55AA
	HP USB-C to USB-A Hub	Z6A00AA
	HP USB-C Travel Hub G3	86S97AA
Keyboard/Combo	HP 155 Wired Mouse and Keyboard Combo	5B8C0AA
	HP 225 Wired Mouse and Keyboard Combo	286J4AA
	HP 235 Wireless Mouse and Keyboard Combo	1Y4D0AA
	HP Wired Desktop 320MK Mouse and Keyboard	9SR36AA
	HP 125 Wired Keyboard	266C9AA
	HP 225 Wireless Keyboard	805T1AA
	HP 320K USB Wired Keyboard	9SR37AA
	HP 355 Compact Multi-Device Keyboard	692S9AA
	HP 405 Multi-Device Backlit Wired Keyboard	7N7C1AA
	HP 435 Programmable Wireless Keypad	7N7C3AA
	HP 455 Programmable Wireless Keyboard	4R177AA
	HP 475 Dual-Mode Wireless Keyboard	7N7B9AA
Mouse	HP 125 Wired Mouse	265A9AA
	HP 125 Wired Mouse (Bulk Qty.120)	265A9A6
	HP 128 Laser Wired Mouse	265D9AA
	HP 128 Laser Wired Mouse (Bulk Qty.120)	265D9A6
	HP 155 Wired Mouse	5B8B7AA
	HP 235 Slim Wireless Mouse	4E407AA
	HP 320M Wired Mouse	9VA80AA
	HP 425 Programmable Wireless Mouse	7M1D5AA
	HP 435 Multi-Device Wireless Mouse	3B4Q5AA
	HP 715 Rechargeable Multi-Device Bluetooth® Mouse	6E6F0AA
	HP 925 Ergonomic Vertical Wireless Mouse	6H1A5AA
	HP Creator Black 935 Wireless Mouse	1D0K8AA
	HP Multi-Device Black 635 Wireless Mouse	1D0K2AA
	HP Premium Wireless Mouse	1JR31AA
Power	HP 110W USB-C Laptop Charger	8B3Y2AA

Options and Accessories (Sold separately and availability may vary by country)

	HP 45W LC USB-C AC power adapter	1MZ01AA
	HP 65W GaN USB-C Laptop Charger	600Q8AA
	HP 65W USB-C Laptop Charger	671R3AA
	HP 65W USB-C LC AC Power Adapter	1P3K6AA
Video	HP USB-A 325 Webcam	53X27AA
	HP Streaming 965 Webcam	695J5AA
	HP 625 Webcam	6Y7L1AA
	HP 435 Webcam	77B10AA

Change Log

Date of change:	Version History:		Description of change:
	V1 to V2		

© Copyright 2024 HP Development Company, L.P. The information contained herein is subject to change without notice. The only warranties for HP products and services are set forth in the express warranty statements accompanying such products and services. Nothing herein should be construed as constituting an additional warranty. HP shall not be liable for technical or editorial errors or omissions contained herein.

AMD and Radeon are trademarks of Advanced Micro Devices, Inc. Bluetooth® is a trademark owned by its proprietor and used by HP Inc. under license. DisplayPort™ and the DisplayPort™ logo are trademarks owned by the Video Electronics Standards Association (VESA®) in the United States and other countries. USB Type-C® and USB-C® are registered trademarks of USB Implementers Forum. SDXC is a registered trademark of SD-3C in the United States, other countries, or both. ENERGY STAR is a registered trademark of the U.S. Environmental Protection Agency.