SmallRig

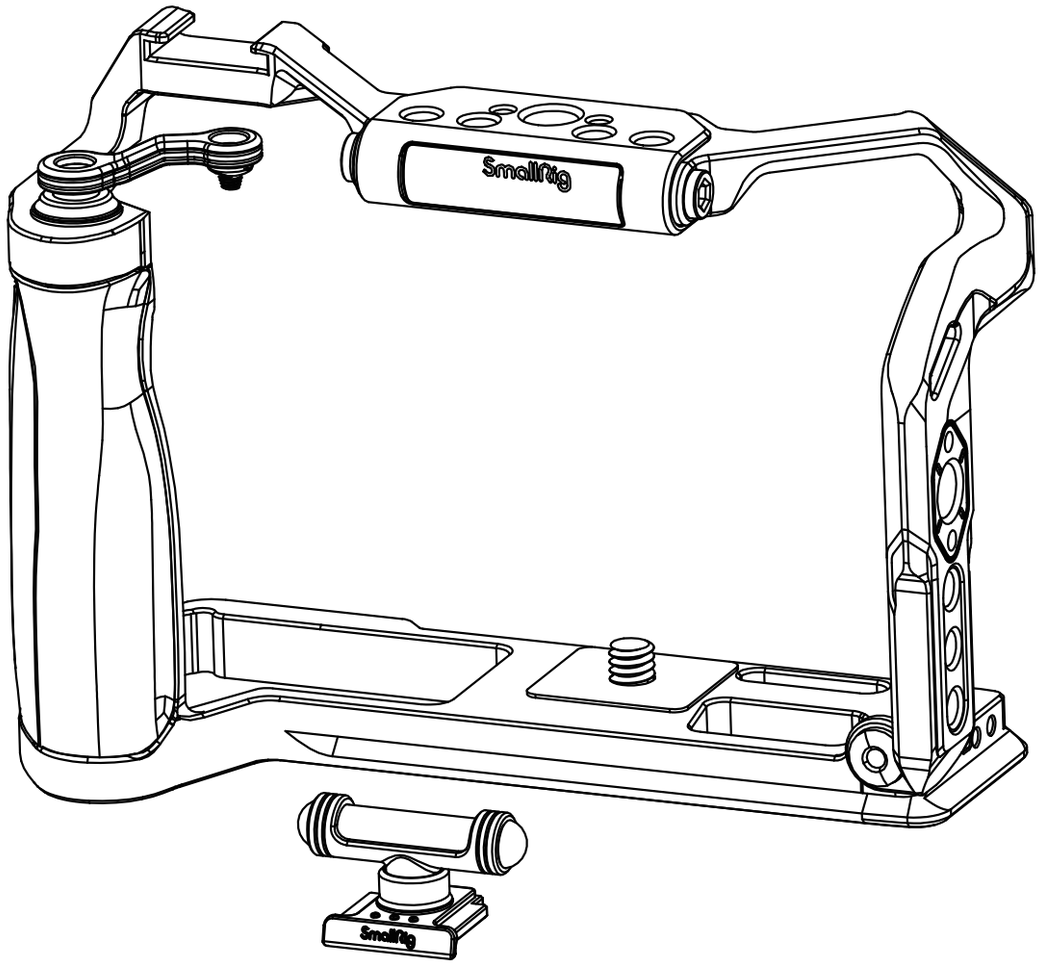

Retro Cage
for FUJIFILM X-T5

User Manual

For your and the item's safety, please read this product manual carefully and keep it well for future reference.

Foreword

Thank you for purchasing SmallRig product.

Instructions

- Please read this User Manual carefully.
- Please keep this User Manual. Always keep this User Manual when passing the products on to the third party.
- Heed all warnings and follow all instructions in this User Manual.

Intended Use

- The user has read the instructions of this manual.
- The user is using the product within the operating conditions and limitations described in this User Manual.
- “Improper use” means using the products other than as described in these instructions or under operating conditions which differ from those described herein.

In the Box

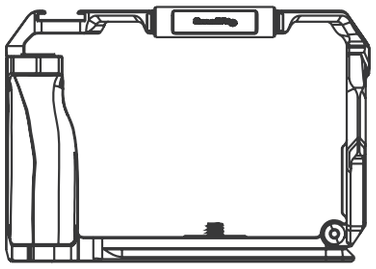

① Cage × 1



② Hot Shoe Cover × 1

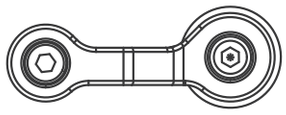

③ Shutter Button Adapter × 1

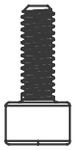

④ M2 Screw (short) × 1



⑤ M2 Screw (long) × 1

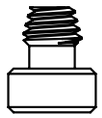

⑥ Tapered Screw × 1

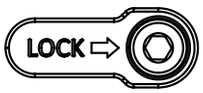

⑦ Side Lock Adapter × 1

Product Detail Display

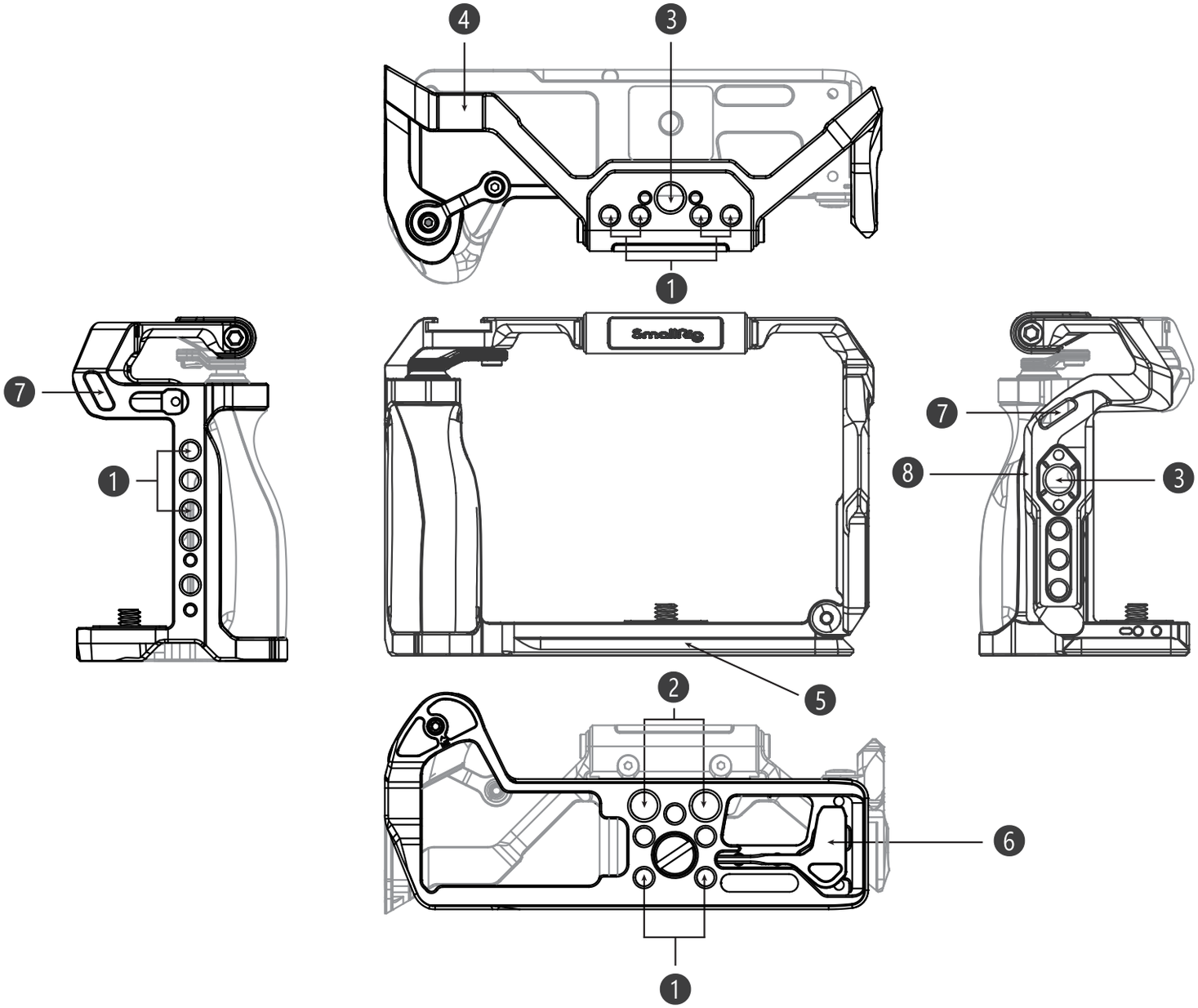

❶ 1/4"-20 Threaded Hole

❷ 3/8"-16 Threaded Hole

❸ ARRI 3/8"-16 Locating Hole

❹ Cold Shoe Mount

❺ Arca-Swiss Quick Release Plate

❻ Dual-Head Wrench

❼ Strap Slot

❽ NATO Rail

Cage Installation Instruction

1.Remove both sides split D-ring before installing the cage

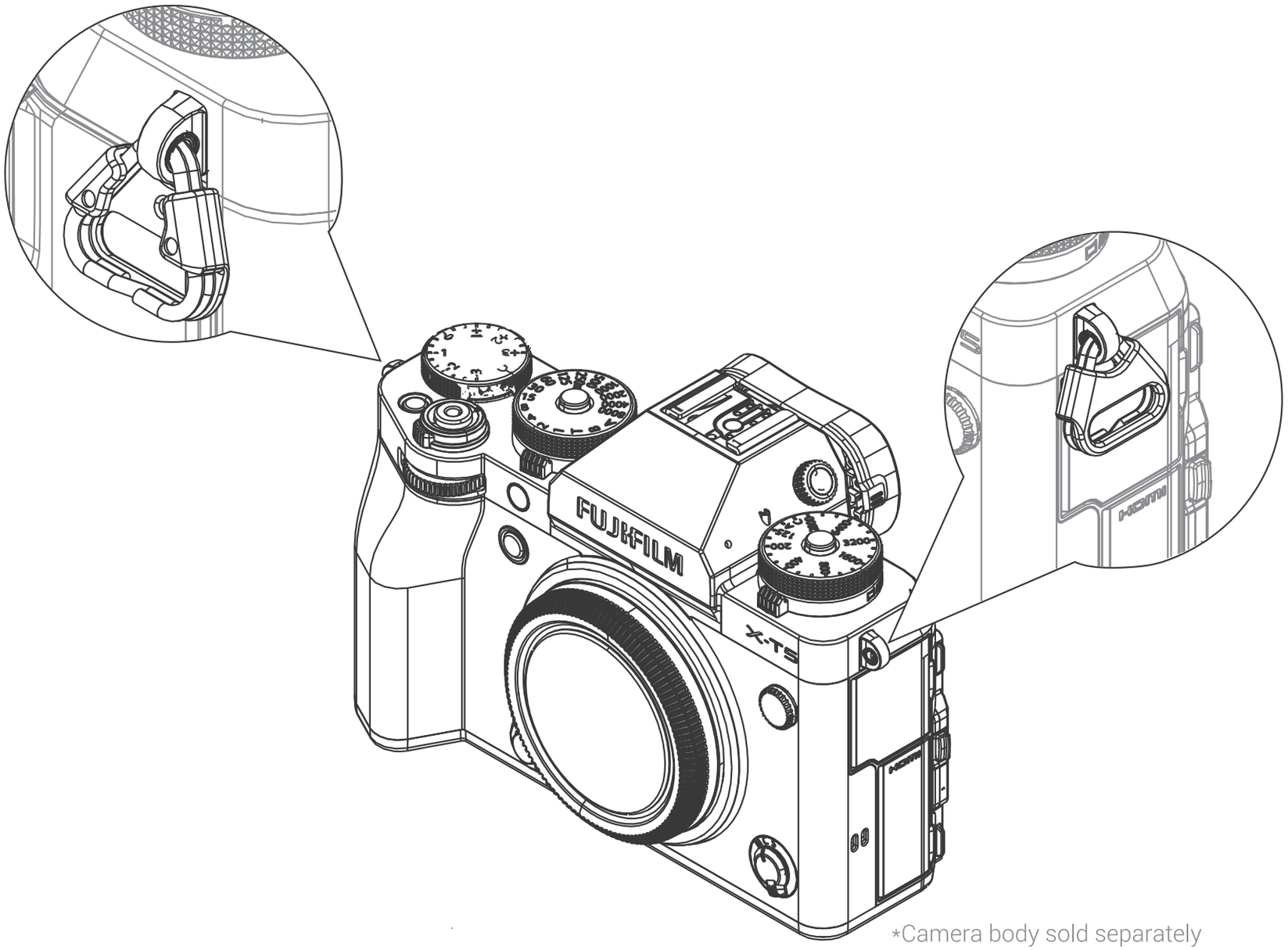

*Camera body sold separately

2.Install the Cage

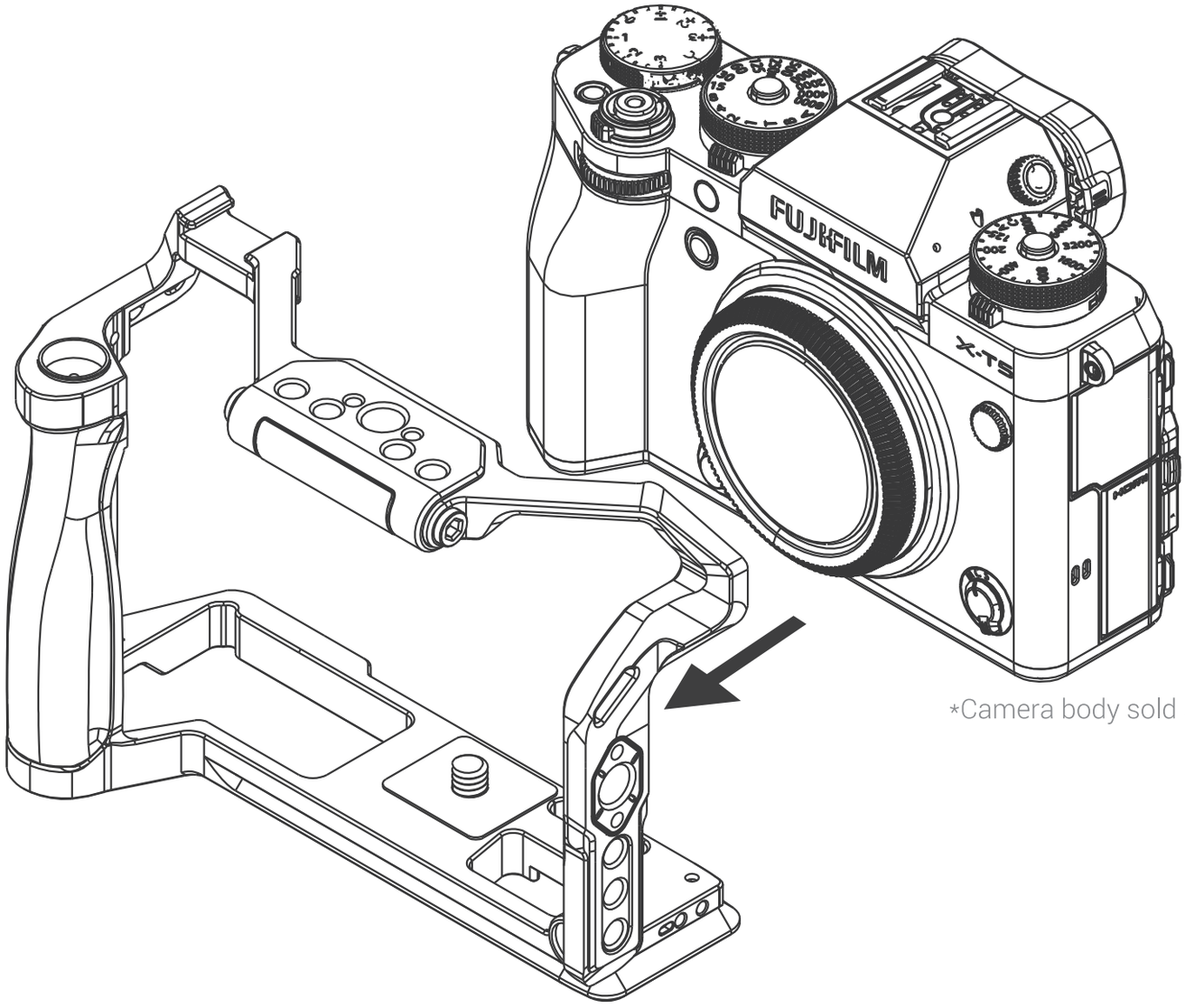

*Camera body sold separately

Step 1: Put the camera into the cage ① from back to the front.

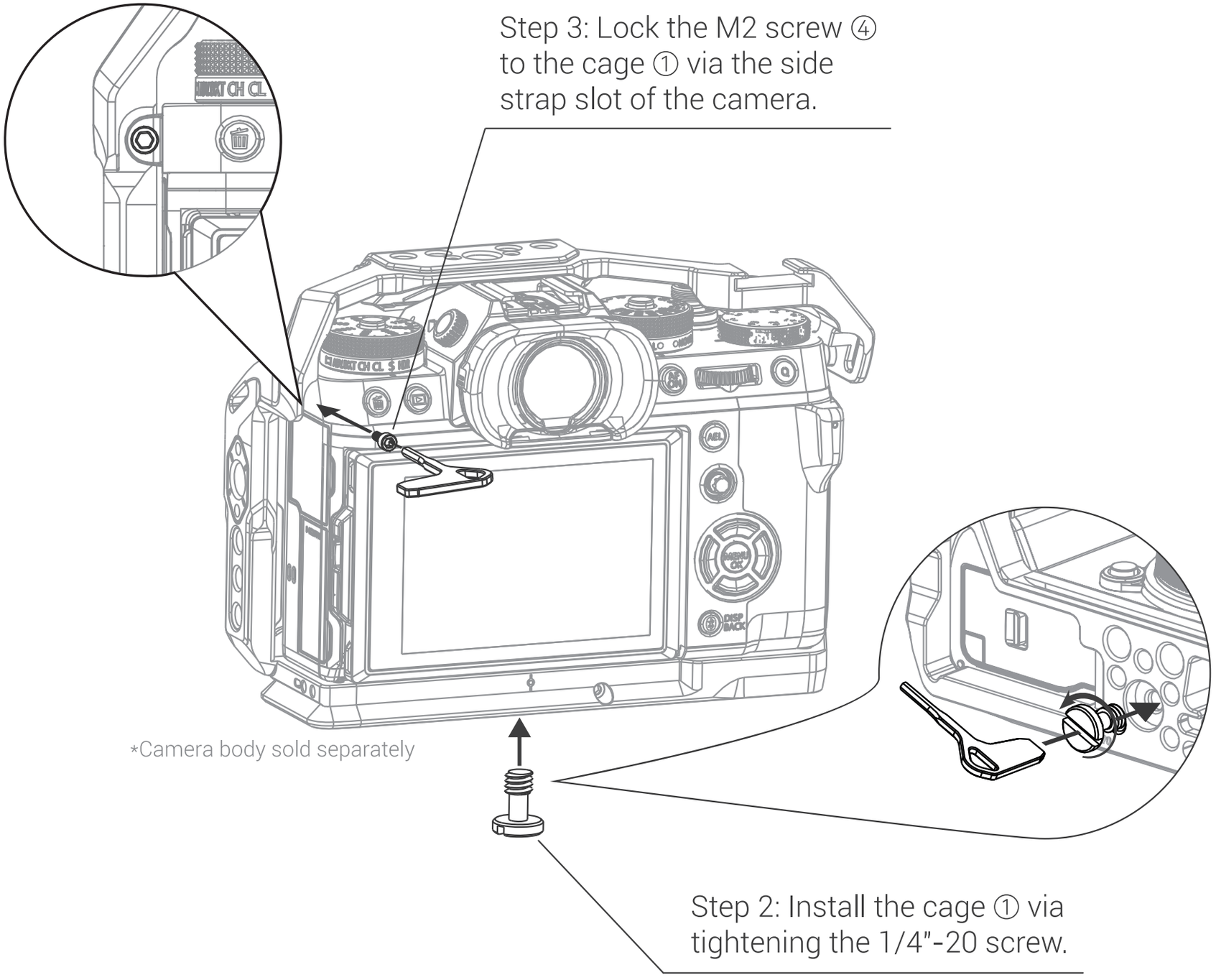
Step 3: Lock the M2 screw ④ to the cage ① via the side strap slot of the camera.
*Camera body sold separately
Step 2: Install the cage ① via tightening the 1/4"-20 screw.

Step 6: Attach the shutter button adapter ③ to the camera shutter button via tightening the tapered screw ⑥.

Step 5: Attach the shutter button adapter ③ to the cage ① via tightening the M2 screw ⑤.

Step 4: Tighten the side lock adapter ⑦.

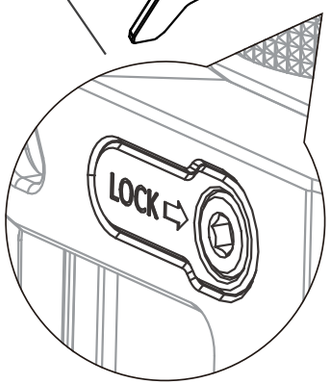

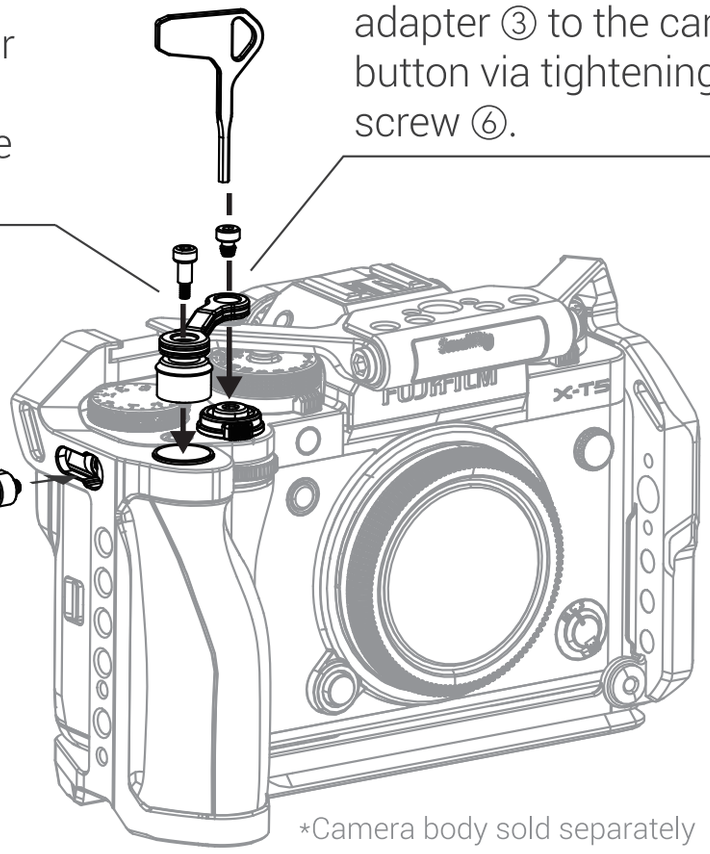

Before installation

*Camera body sold separately

After installation

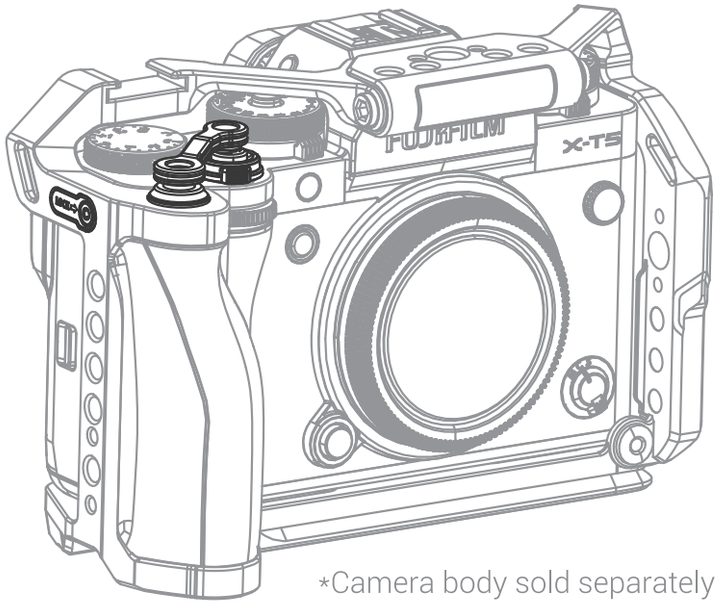

*Camera body sold separately

Hot Shoe Cover Installation Instruction

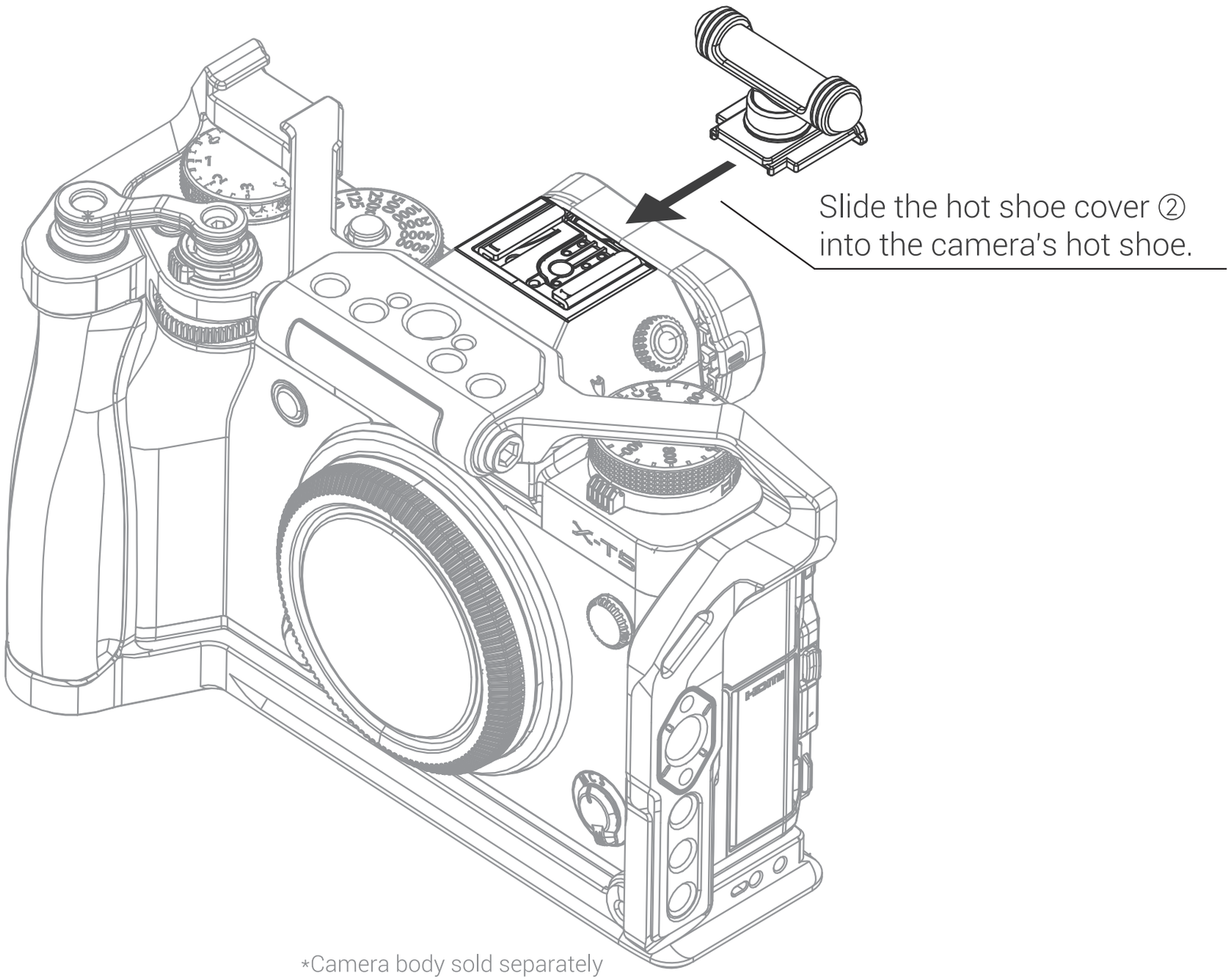

*Camera body sold separately

Compatibility

FUJIFILM X-T5

Specifications

Product Dimensions: 145.8 × 63.25 × 103.4mm

Product Weight: 235g ± 5g

Material(s): Aluminum Alloy, Silicone, Leather, Stainless Steel